CMP

Stonemason Supplies Pty Ltd

2021
CATALOGUE

CMP
Stonemason Supplies

ABOUT US:

CMP Stonemason Supplies Pty Ltd are located in Hallam's thriving Business District, situated in the South Eastern suburbs of Melbourne.

Our factory is open to customers to purchase directly or we can deliver/post to you (certain conditions apply for deliveries)

We are located at: 7 Bolt Court, Hallam, Victoria 3803

WHAT WE OFFER:

- An extensive range of tools to suit the demands of the stone industry
- Open 5 days a week from 8:30am to 5pm, to the public.
- If you're not in Victoria or Queensland, we also offer postage and freight to various locations across Australia.
- We have sales vans on the road, delivering within certain parts of Victoria and Queensland (certain locations only).
- If you're new to the industry, our friendly staff can help you determine what you need to get your business up and running.
- We make sure that we always pass savings to our customers where we can.

HOW TO PLACE AN ORDER:

Call our sales team on (03) 8786 3113 or email us at sales@cmpstone.com.au. Provide us with the item code and description of the item you would like to order.
If you are a new customer and do not have an account with us you will need to make an upfront payment via credit card or EFT prior to the order being dispatched or taken.

WHERE ARE WE?

MELBOURNE OFFICE
7 BOLT COURT
HALLAM VIC 3803
Tel: (03) 8786 3113
sales@cmpstone.com.au

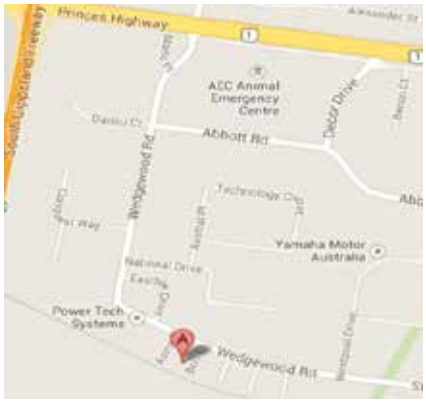

QUEENSLAND OFFICE
24/22 CESSNA DRIVE
CABOOLTURE QLD 4510
TEL: (07) 5495 7674
qld.sales@cmpstone.com.au

MELBOURNE DELIVERIES

Brian McLoghlin - 0402 829 234
Morris Sione - 0421 237 576

QUEENSLAND DELIVERIES

Andrew Krosch - 0432 557 280

CONTENTS:

Diamond Blades..... 1

Grinding Cups..... 8
Profile Routers
Core Drills
Electroplated Tools

Polishing Tools..... 17
Air/Electric Tools
Silicon Carbide/Magnesite Abrasives
Silicon Carbide Belts and Discs

Couplers.....29
Tool Holders
Adaptors

Consumables..... 32
Chemicals
Glues & Epoxy
Safety Gear

Chisels..... 47
Hammers/Clubs/Mallets
Plugs & Feathers
Pneumatic Hammers

Transport & Handling..... 55
Storage & Racking
Lifting Equipment & Trolleys

Portable Saws & Heavy Machinery 72

Parameters and Specifications.....83

Diamond Saw Blade

Granite
Marble
Recon / Engineered Stone
Sandstone
Blue Stone
Dekton / Lapitec / Neolith
Ceramic
Porcelain

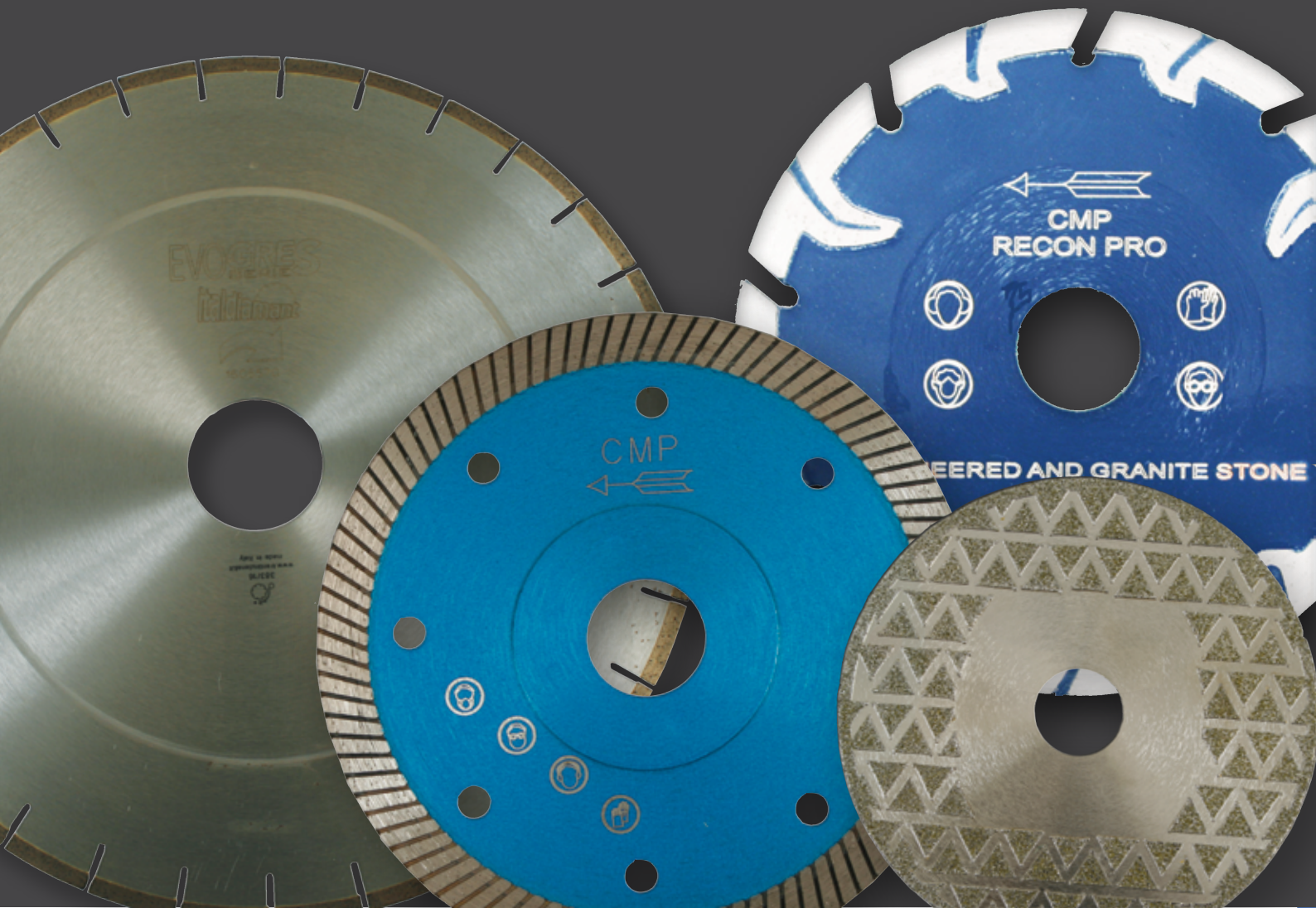

DURASTAR PRO BLADE

Size	Codes
125mm	SDDU5
150mm	SDDU6
180mm	SDDU7
200mm	SDDU8
225mm	SDDU9

- Suitable for soft Granite and Engineered Stone
- Number 1 amongst Stone fabricators
- Excellent cutting life on Engineered Stone & Granite
- Dry cutting

GRANITE MASTER

Size	Codes
125mm	SDGM05
225mm	SDGM09

- Fast cutting for Class 5 Granite
- Non chipping
- Wet and dry cutting

NYLAH TURBO BLADE PREMIUM

Size	Codes
100mm	SLTB04
125mm	SLTB05
150mm	SLTB06
180mm	SLTB07
225mm	SLTB09

- Suitable for Granite, Blue Stone and general purpose
- Fast cutting
- Non chipping
- 4,5,6,7 & 9 inch available with flange

LASER BLADE FOR DEKTON

Size	Codes
125mm	ITDB05

- For smooth quality cuts on Dekton
- Block segments
- Made in Italy

MULTI CUT BLADE WITH M14 FLANG

Size	Codes
125mm	DDMCB05/C

- All in one for Grinding and Cutting
- Use on Hard Granite

AKIRA PORCELAIN THIN TURBO BLADE

Size	Codes
100mm	EHTDB4
125mm	EHTDB5

- Suitable for hard Porcelain & Ceramic tiles
- Quality blade for dry-cutting
- Smooth cutting, Non chipping blade

BISON ABRASIVE BLADE

Size	Codes
115mm	SDABY04.5
125mm	SDABY05
178mm	SDABY07
255mm	SDABY09

- Laser welded segments
- Ideal for cutting on Sandstone/ Concrete / Roof tiles
- Tungsten inserts
- Available with or without flange

CYCLONE PREMIUM BLADE ORANGE

Size	Codes
125mm	BOCP5

- Fast cutting general purpose blade
- Suitable for use on Recon/Granite or hard stones
- Economically priced

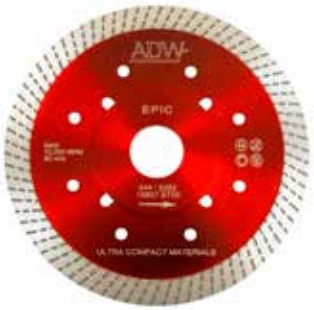

EPIC

Size	Codes
125mm	ADWEPIC

- Wet cutting
- Non-chipping
- Made in ADW Spain

SPRINT CUTTER TILE BLADE

Size	Codes
100mm	SDSC04
125mm	SDSC05

- Suitable for hard Porcelain & Ceramic tiles
- Dry cutting

SWIFT PORCELAIN MARBLE

Size	Codes
178mm)	SDRB07
200mm	SDRB08
230mm	SDRB09
254mm	SDRB10
305mm	SDRB12
350mm	SDRB14

- Suitable for soft Granite, Engineered Stone, hard Porcelain & Ceramic tiles
- Ideal for Tile Saw

VACUUM CONCAVE BLADE

Size	Codes
125mm	ADWVCB

- Curved cut jobs such as sinkholes/counter tops
- Wet cutting
- Made in ADW spain

SABRE ELECTOPLATED MARBLE BLADE

Size	Codes
100mm	SDEMB04
125mm	SDEMB05
180mm	SDEMB07
230mm	SDEMB09

- Electroplated
- Suitable for Marble & Limestone
- Rim spoked
- 5 inch also available with Gullet slots
- Smooth Non-chipping

ELECTROPLATED VANITY BLADE

Size	Codes
125mm	SDVB5

- Electroplated
- Cutting & grinding
- Suitable for Marble/ Limestone/ Porcelain
- Diamond studded body
- M14 flanged available

CONVEX BLADE

Size	Codes
125mm	KGS3102.20231

- Suitable for Engineered & Granite Stone
- For sink cut outs & other similar work

RED SHARK K936 ELECTROPLATED BLADE

Size	Codes
125mm	KGS3102.20235

- High-tech electroplated diamond cutting blade
- Fast cutting
- Long life time
- Clean cut because of superior plating quality
- For Marble

SWIFLEX COBRA BLADE DOUBLE SIDED

Size	Codes
125mm	KGS3023.20781

- Electroplated
- For dry cutting and grinding
- M14
- Unique design
- Superior plating quality for fast and clean cutting and grinding
- Special diamonds for extremely long life time

ITALDIAMANT SILENT GRANITE ENGINEERED BLADE

Size	Codes
350mm	ITGB350
400mm	ITGB400
450mm	ITGB450
500mm	ITGB500

- Silent centre (60 mm)
- 20H Segments
- Sandwich Type
- Bigger sizes available on request
- Made in Italy
- **See page 76 for specifications**

ITALDIAMANT MARBLE BLADE

Size	Codes
400mm	ITMB400
450mm	ITMB450
500mm	ITMB500

- Fine cutting of delicate Marble - wet
- Block segments
- Made in Italy
- **See page 76 for specifications**

ITALDIAMANT GRANITE BLADE STANDARD CENTRE (CNC)

Size	Codes
450mm	ITCNC450

- Pre-drilled holes to use on CNC type Bridge Saw Combi Cut
- Block segments
- Made in Italy
- **See page 76 for specifications**

ITALDIAMANT QUARTZITE BLADE

Size	Codes
400mm	ITQB400
450mm	ITQB450

- For smooth quality cuts on Quartzite
- Made in Italy
- **See page 76 for specifications**

ITALDIAMANT DEKTON BLADE

Size	Codes
350mm	ITDB350
400mm	ITDB400
450mm	ITDB450
500mm	ITDB500

- For smooth quality cuts on Dekton
- Block segments
- Made in Italy
- **See page 76 for specifications**

ITALDIAMANT EVOGRES BLADE

Size	Codes
350mm	ITDB350
400mm	ITDB400
450mm	ITDB450
350mm	ITPCB350

- Suitable for site saws
- 30/25.4 Bore
- 10mm Seg x 2.4 Thick

CIDIAM/BAICCHI MITRE SAW BLADE

Size	Codes
300mm	BAIMS300
350mm	BAIMS350/BL
350mm	CIDMPB350

- Ideal blade for cutting 45 degrees for mitre saw
- Soft bonded segments
- Fine (marble), medium

GRANITE BLADE STANDARD CENTRE

Size	Codes
300mm	SLGB300
350mm	SLGB350
400mm	SLGB400
450mm	SLGB450

- For Granite & Recon Stone
- Standard steel centre
- 30/25.4 mm hole
- Block segments
- Silent centre also available
- Made in Korea

SANDSTONE BLADE STANDARD CENTRE

Size	Codes
350mm	SLSB350

- 350 mm Sandstone blade
- Block segments

MILLING WHEEL 400mm

Type	Grit	Codes
Marble	36	DDMW400/M
Granite	60	DDMW400/G

- Removing stock from Granite/Engineered Stone & Marble
- Segment size 8mm x 8mm x - 38nn L - 45N

VACUUM BRAZED WHEEL

Size	Codes
400 x R 6.35	DDVBW400

- Profile for draining board grooves

TIMBER PLANING BLADE

Size	Codes
380mm	FAR380PB

- 50W/60 Bore
- Replacement teeth for Farnese planning blade available for purchase

WOOD PLANER BLADE

Size	Codes
400mm	HIRE

- Used for planning wooden tables
- AVAILABLE FOR HIRE

Grinding Cups

Profile Routers
Core Drills
Electroplated Tools

TURBO GRINDING CUP WHEEL

Size	Grit	Codes
100mm	Coarse	SDTGW4C
100mm	Medium	SDTGW4M
100mm	Fine	SDTGW4F
125mm	Coarse	SDTGW5C
125mm	Medium	SDTGW5M
125mm	Fine	SDTGW5F

- Fast stock removal
- Suitable for all types of Natural & Engineered Stone
- Dry/ wet use
- 2 layered
- M14/ 22.23H

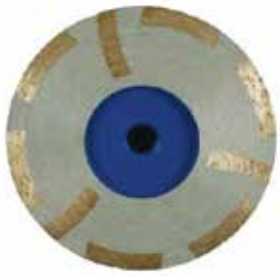

100mm RESIN CUP WHEEL

Size	Codes
100mm	SKRW

- Fast stock removal
- Well balanced
- Suitable for all types of Natural Stone & Engineered Stone
- M14 Thread
- Made in Japan
- For use on an angle grinder

100mm RESIN CUP WHEEL

Size	Grit	Codes
100mm	Coarse	DDRCW4/C
100mm	Medium	DDRCW4/M
100mm	Fine	DDRCW4/F

- Wet Grinding
- Ideal for all types of Stone

100mm CONVEX CUP

Size	Codes
100mm	DDCCW4

- Specially designed for grinding off curved surfaces
- M14 thread

100mm MAGNETIC TORNADO GRINDING PLATES

Size	Grit	Codes
100mm	Coarse	SLMTC4C
100mm	Medium	SLMTC4M
100mm	Fine	SLMTC4F

- Made in Italy
- Use with magnetic coupler
- Wet use only

JETTA EDGE GRINDING CUP

Size	Grit	Codes
100mm	Coarse	DDJCW4C
100mm	Medium	DDJCW4M
100mm	Fine	DDJCW4F

- For an edge polishing machine
- S/F attachment

125MM VACUUM BRAZED FLAT CUP

Size	Grit	Codes
125mm	Coarse	SDVBC5C
125mm	Medium	SDVBC5M
125mm	Fine	SDVBC5F

- Used for stock removal
- Ideal for all type of Natural Stone & Concrete

100MM 180MM DOUBLE SEGMENTED CONCRETE GRINDING CUP

Size	Codes
100mm	SLDSC4
178mm	SLDSC7

- Double segmented
- M14

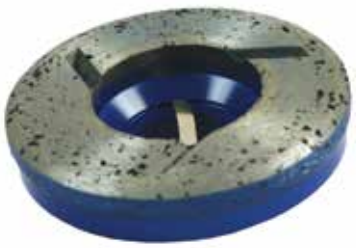

SOLID FACE PROFILE CUP

Size	Grit	Codes
100mm	Coarse	DDSCW4C
100mm	Medium	DDSCW4M
100mm	Fine	DDSCW4F

- For use on edge polishing machine
- Wet use only
- M24 - snail lock

250mm METAL POLISH GRINDING PLATE

Size	Grit	Codes
250mm	50/60	SDMP250
250mm	120	SDMP250/1
250mm	200	SDMP250/2
250mm	400	SDMP250/4

- For calibrating and stock removal
- for surface
- Grinding application
- **Please refer to 10' Resin radial arm polishing plates on page 20**

178mm GRINDING PLATE FOR GRANITE

Size	Grit	Codes
178mm	50/Fine	SLGP7/F
178mm	60/Medium	SLGP7/M
178mm	80/Course	SLGP7/C

- For use on Rhino edge polisher
- Used for grinding & squaring stone

PROFILE ROUTERS V PROFILE

Size	Grit	Codes
40mm	Coarse	SLPWV40/1

- Excellent performance to grind profiles
- Includes spacer & bolts

PROFILE ROUTERS F PROFILE

Size	Grit	Codes
20mm	Coarse	SLPWF20/1
20mm	Medium	SLPWF20/2

- Excellent performance to grind profiles
- Includes spacer & bolts

SOLID SINTERED DRUM - 50

Size	Grit	Codes
50 x 53mm	36	DDSD50036
50 x 53mm	60	DDSD50060
50 x 53mm	120	DDSD50120

- For smoothing internal holes & curves
- Marble & Granite
- M14

ELECTROPLATED DRUM

Size	Grit	Codes
75 x 40mm	Coarse	SDEDC
75 x 40mm	Medium	SDEDM
75 x 40mm	Fine	SDEDF

- For smoothing and shaping internal holes
- Marble & Recon stone
- Grades 40/50, 60/80 & 80/120
- M14

VACUUM BRAZED DRUM

Size	Codes
15mm	SLVBD15/C/F/M
25mm	SLVBD25/C/F/M
40mm	SLVBD40/C/F/M
75mm	DDVBD75/C/F/M

- For smoothing and shaping internal holes & curves
- Marble & Recon Stone
- M14

ZERO TOLERANCE WHEEL

Size	Grit	Codes
75 x 35 mm	Coarse	SLZTW

- M14

FINGER MILLING BIT

Type	Codes
Black (22 x 45)	DUTDFR02266
Gold (20 x 45)	DUTDFR01920
Orange (20 x 25)	ITFMB

- Black Finger milling bit for Engineered Stone RPM=7000/FEED=300-400mm/min
- Gold Finger milling bit for hard Granite/ Engineered Stone, RPM=5000/FEED=250-300mm/min
- "Evogres" finger miling bit- Dekton Porcelain

SCLPT TIP C-CYLINDER

Size	Codes
6mm C-Cylinder 10-35	DDSTC1035
6mm C-Cylinder 15-13	DDSTC1513
6mm D-Trapeze 15-13	DDSTD1513
6mm E-Tree 15-13	DDSTE1513
6mm G-Cone 15-13	DDSTG1513

CORE PIN DRILL

Size	Codes
5mm	PMDB05
6mm	PMDB06
8mm	PMDB08
10mm	PMDB10
12mm	PMDB12
14mm	PMDB14
16mm	PMDB16

- Wet use
- For Granite and Engineered Stone

NON CORE PIN DRILL

Size	Codes
5mm	SLPD05
6mm	SLPD06
7mm	SLPD07
8mm	SLPD08
10mm	SLPD10
12mm	SLPD12
15mm	SLPD15
R 1/2"	SLGPDADP

DIAMOND CORE BITS - 12MM HEX SHANK

Size	Codes	Size	Codes
15mm	SLCD015	55mm	SLCD055
20mm	SLCD020	60mm	SLCD060
25mm	SLCD025	65mm	SLCD065
30mm	SLCD030	70mm	SLCD070
35mm	SLCD035	75mm	SLCD075
40mm	SLCD040	80mm	SLCD080
45mm	SLCD045	90mm	SLCD090
50mm	SLCD050	100mm	SLCD100

- Maximum size 120mm
- Use wet or dry for Recon and Natural Stone and Granite
- M14 also available

ITALDIAMANT VACUUM BRAZED CORE DRILL BITS

Size	Codes	Size	Codes
5mm	ITVBC05	20mm	ITVBC20
6mm	ITVBC06	25mm	ITVBC25
8mm	ITVBC08	34mm	ITVBC34
10mm	ITVBC10	35mm	ITVBC35
12mm	ITVBC12	60mm	ITVBC60
15mm	ITVBC15	65mm	ITVBC65

- Ideal for Marble, Limestone & Porcelain for a clean Non-chipping cut/hole
- 60mm & 65mm available in M14
- **See page 76 for specifications**

VACUUM BRAZED CORE DRILL BITS

Size	Codes
20mm	DDVBCB20
25mm	DDVBCB25
30mm	DDVBCB30
35mm	DDVBCB35
40mm	DDVBCB40
50mm	DDVBCB50
60mm	DDVBCB60
80mm	DDVBCB80

- Hex shank

Size	Codes
20mm	DDVBCD020/M14
25mm	DDVBCD025/M14
30mm	DDVBCD030/M14
35mm	DDVBCD035/M14
50mm	DDVBCD050/M14
60mm	DDVBCD060/M14
70mm	DDVBCD070/M14
80mm	DDVBCD080/M14
100mm	DDVBCD100/M14

- M14

T-SEG CORE DRILL WITH VACUUM STRIPE

Size	Codes
20mm	DDCD020/M14
25mm	DDCD025/M14
30mm	DDCD030/M14
35mm	DDCD035/M14
40mm	DDCD040/M14
45mm	DDCD045/M14
50mm	DDCD050/M14
60mm	DDCD060/M14
80mm	DDCD080/M14
100mm	DDCD100/M14

THIN WALL CORE DRILL - 1/2" GAS

Size	Codes
35mm	DDTWCB35

- Available for Granite and Recon stone
- Also available for Dekton, Lapitec, Laminam & Neolith

MILING CROWN M10

Size	Codes
20 x 20mm	DDMC20

ELECTROPLATED JIGSAW BLADES

Codes
DP0076JSB

- Universal jigsaw fitting
- Use on Marble and Porcelain

FINGERMILL VACUUM BRAZED

Size	Codes
Ø 20 x 50 L	DDVBFM202530

- Z Profile
- Pos 2 ELP C cleaning tool
- 1/2" Gas fitting
- Coarse

ELECTROPLATED CORE DRILL BITS

Size	Codes
6mm	SDEPCD06
8mm	SDEPCD08
10mm	SDEPCD10
12mm	SDEPCD12
14mm	SDEPCD14
35mm	SDEPCD35
40mm	SDEPCD40
50mm	SDEPCD50

- Ideal for Marble, Limestone & Porcelain for a clean Non-chipping cut/hole
- 27mm + also available in M14

ROUTER FOR DEKTON

Type	Codes
Milling Router for Dekton 20x45	DUTDDKFR10001
Milling Router for Dekton 20x25	DUTDDKFR10002

- RPM= 4000
- Feed Rate= 200mm/min (for Dekton)
- Feed Rate= 200-300mm/min (for Porcelain)

DRILL FOR DEKTON

Type	Codes
Thin wall core drill Ø 35mm diameter	DUTDDKFGR000035

- RPM= 1900-2000
- Feed Rate= 10-20 mm/min

TOOLS FOR REBATE DEKTON

Type	Codes
Adapter holder for special bit for rebate	DUTDFR00710
Special flat diamond bit for rebate Ø10mm diameter length	DUTDDKFR10003

- RPM= 6000-7000
- Feed Rate= 200mm/min
- Removal= 1mm up to 2mm

AR20 Ø20MM DIAMETER 1/2" GAS FITTING HYS VERSION - MICROLINE

Type	Codes
Pos.1 diamond continunous band with water holes	DUTDGH83608
Pos.2 diamond continunous band with water holes	DUTDGH83609
Pos.3 diamond continunous band with water holes	DUTDGH83610
Pos.4 diamond continunous band with water holes	DUTDGH83611
Pos. Blue flash (express) polishing wheel	DUTDLG31502
Pos. White flash (express) polishing wheel	DUTDLG31503

- **See page 76 for parameters**

DIAMUT

CALIBRATING WHEEL FOR COMANDULLI

Type	Codes
Calibrating wheel with Ø 190mm diameter	DUTDLC00045

- Bore= 50 mm
- Machines Models= ALMA - MUSA - PENTA - SPIRA - OPTIMA

CALIBRATING WHEEL FOR COMANDULLI

Type	Codes
Calibrating wheel with Ø 260mm diameter	DUTDLC00048

- Bore= 50 mm
- Machines Models= EDILUX - SYNTHESIS - OMEGA 60/100 LUXLINE

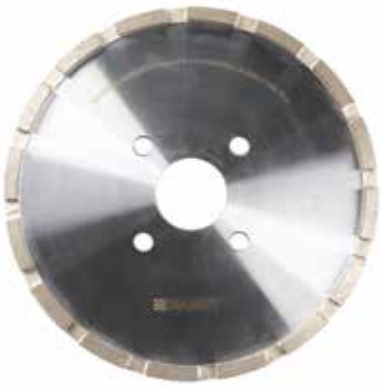

PRECUTTING WHEEL FOR COMANDULLI

Type	Codes
Precutting wheel with Ø 155mm diameter	DUTDLC00012

- Bore= 50 mm
- Machines Models= SYNTHESIS - OMEGA 60/100 - ALMA

GENERATING WHEEL

Type	Codes
Generating Wheel with Ø 120mm diameter	DUTDLC00043

- Bore= M30
- Machines Models= SYSTEM 180 SPEEDY SYSTEM ATHENA SYSTEM PLUS

GENERATING WHEEL

Type	Codes
Generating Wheel with Ø 130mm diameter	DUTDLC00013

- Bore= M30
- Machines Models= SYNTHESIS - OMEGA 60/100 - ALMA

DIAMUT

Polishing Tools

Polishing Pads
Silicone Carbide
Magnesite Abrasives
Belts & Discs
Air/ Electric Tools

BLIZZARD WET POLISHING PADS - WHITE

100mm	Codes	125mm	Codes
50	KDEP0050	50	KDEP50050
100	KDEP0100	100	KDEP50100
200	KDEP0200	200	KDEP50200
400	KDEP0400	400	KDEP50400
800	KDEP0800	800	KDEP50800
1500	KDEP1500	1500	KDEP51500
3000	KDEP3000	3000	KDEP53000

- Velcro backed
- For hand held polishing machines

DIAMASTER POLISHING PADS - JAPAN

100mm	Codes	125mm	Codes
40	CDDP0040	40	CDDP50040
60	CDDP0060	60	CDDP50060
100	CDDP0100	100	CDDP50100
200	CDDP0200	200	CDDP50200
400	CDDP0400	400	CDDP50400
800	CDDP0800	800	CDDP50800
1500	CDDP1500	1500	CDDP51500
3000	CDDP3000	3000	CDDP53000
BUFF	CDDPBUFF	BUFF	CDDP5BUFF

- Velcro backed
- For hand held polishing machines

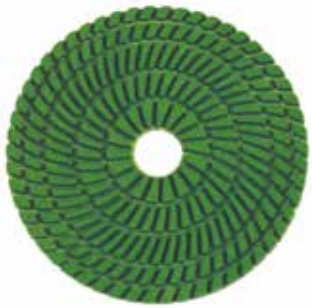

VIPER 5 POLISHING PADS

Type	Codes
1	KTDVP401
2	KTDVP402
3	KTDVP403
4	KTDVP404
5	KTDVP405

- For polishing dark coloured stone, especially black
- For better results use wet

DRY POLISHING PADS -100mm

Grit	Codes
50	KDP0050
100	KDP0100
200	KDP0200
400	KDP0400
800	KDP0800
1500	KDP1500
3000	KDP3000

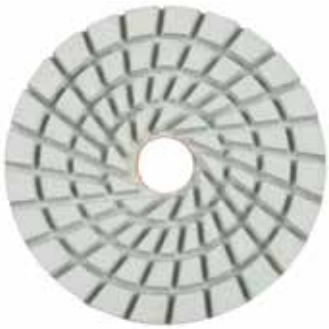

100mm SUPER 5T POLISHING PAD

Grit	Codes
50	AD5T40050
100	AD5T40100
200	AD5T40200
400	AD5T40400
800	AD5T40800
1500	AD5T41500
3000	AD5T43000

- For wet use on large concrete areas

KGS SPEEDLINE EGP POLISHING PADS 125mm

Size	Grit	Codes
125mm	50	KGS3024.30061
125mm	120	KGS3024.30063
125mm	200	KGS3024.30064
125mm	400	KGS3024.30065
125mm	800	KGS3024.30066
125mm	1500	KGS3024.30067
125mm	3000	KGS3024.30068
125mm	BUFF	KGS3024.30069

- Diameter: 125 mm Attachment
- Colour coded discs with snail fit attachment
- Application: For grinding and polishing of Granite, Engineered Stone, Hard Marble, Concrete and Terrazzo with hand held and stationary machines
- Also available KGS Speedline EGP Polishing Pad 4" (100 mm)

LOTUS PAD

100mm		125mm	
Grit	Codes	Grit	Codes
50	KTDLP40050	50	KTDLP50050
100	KTDLP40100	100	KTDLP50100
200	KTDLP40200	200	KTDLP50200
400	KTDLP40400	400	KTDLP50400
800	KTDLP40800	800	KTDLP50800
1500	KTDLP41500	1500	KTDLP51500
3000	KTDLP43000	3000	KTDLP53000

- For Concrete/ all Natural and Engineered Stone
- Wet and dry use

CONVEX POLISHING PADS 75mm

Grit	Codes
50	KCP0050
100	KCP0100
200	KCP0200
400	KCP0400
800	KCP0800
1500	KCP1500
3000	KCP3000
BUFF	KCPBUFF

- For wet use

TWINCUR RESIN ES

Grit	Codes
50	SK5/0050EG
100	SK5/0100ES
200	SK5/0200ES
500	SK5/0500ES
1000	SK5/1000ES
2000	SK5/2000ES
3000	SK5/3000ES

- For Reconstituted Stone polishing on edge machines
- Snail backed
- Wet use only

SWIFLEX XX POLISHING PADS - 100mm

Grit	Codes
60	KGS4023.00314
120	KGS4023.00315
200	KGS4023.00316
400	KGS4023.00317
800	KGS4023.00318
1500	KGS4023.00319
3000	KGS4023.00320

- Specifically designed for dry use on light coloured marble
- Grinding and polishing in one tool
- No surface staining/decolouration

DRAINING BOARD WATER GROVE WHEEL

Grit	Codes
50	KTDFW050
60	KTDFW060
100	KTDFW0100
200	KTDFW0200
400	KTDFW0400
800	KTDFW0800
1500	KTDFW1500

- Diameter: 100 mm
- Application: for grinding and polishing water drain grooves.
- To be used on CNC, stationary and hand held machines

10” RESIN RADIAL ARM POLISHING PLATES

Grit	Codes
100	KDRP0100
200	KDRP0200
400	KDRP0400
800	KDRP0800
1500	KDRP1500
3000	KDRP3000

- 100 & 1500 grit also Available
- Edge & surface polishing granite
- **Please refer to 10” Metal polish grinding plate on page 10**

SANWA KENMA POLISHING PAD 100mm

Grit	Codes
60	SKDCDP40060
200	SKDCDP40200
500	SKDCDP40500
1000	SKDCDP41000
2000	SKDCDP42000
3000	SKDCDP43000

- Granite marble dekton and porcelain

SPEEDLINE POLO F PAD - 75mm

Grit	Codes
50	KGS3023.30702
60	KGS3023.30703
120	KGS3023.30704
200	KGS3023.30705
400	KGS3023.30706
800	KGS3023.30707
1500	KGS3023.30708
3000	KGS3023.30709

- Designed for dry polishing of Concrete and terrazzo
- Delivers the productivity and lifetime

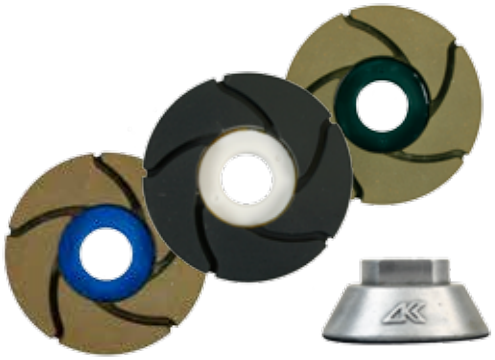

80mm TWINCUR ADAPTOR

Grit	Codes
100R	SKTC0100
200R	SKTC0200
500R	SKTC0500
1000R	SKTC1000
2000R	SKTC2000
3000R	SKTC3000
BUFF BLACK	SKTCBUFFB
ADAPTOR	SKTWMP80ADP

- For re-polishing

DIAFACE SELF ADHESIVE PAPER PADS 75mm X 75 mm - KGS

Grit	Codes
60M	KGS1043.0100711
120M	KGS1043.0100712
200M	KGS1043.0100713
400M	KGS1043.0100714
800R	KGS1043.0100725
1500R	KGS1043.0100726
3000R	KGS1043.0100727

- For wet use on Granite, Marble, Engineered Stone, Glass, Ceramics and Porcelain

HAND POLISHING PADS - KGS DIAFACE

Grit	Codes
60M	KGS1041.0100011
120M	KGS1041.0100012
200M	KGS1041.0100013
400M	KGS1041.0100014
800R	KGS1041.0100026
1500R	KGS1041.0100027
3300R	KGS1041.0100028

- 90 x 55mm
- For Granite and Reconstituted Stone
- Can be used wet or dry

TELUM BELTS - KGS

Grit	Codes
60M	KGS1002.0100011
120M	KGS1002.0100012
200M	KGS1002.0100013
400M	KGS1002.0100014
800R	KGS1002.0100025
1500R	KGS1002.0100026
3000R	KGS1002.0100027

- 75 x 38mm
- For use with adapter
- Resin / Metal bonded
- Used for polishing
- Also available in other sizes call for more info

ELECTROPLATED DIAMOND FLAP DISC - KGS

Grit	Codes
60M	KGS4024.00001
120M	KGS4024.00006
200M	KGS4024.00007
FLANGE ADAPTOR	SLFADP

- 115 mm
- Diamond flap disk for bevelling
- Extreme grinding with incredible lifetime
- Very clean and straight edge quality
- Soft feel while grinding compared to cup wheels
- Flange Adapter M14 (sold separate)

HAND POLISHING PADS - F20 PROFILE

Grit	Codes
60M	KGS1041.0103111
120M	KGS1041.0103112
200M	KGS1041.0103113
400M	KGS1041.0103114
800R	KGS1041.0103125
1500R	KGS1041.0103126
3000R	KGS1041.0103127

- 90 x 55mm
- For granite and Reconstituted Stone
- Can be used wet or dry

MINI POLISHING DRUMS

Grit	Codes
50	KDWMD0050
100	KDWMD0100
200	KDWMD0200
400	KDWMD0400
800	KDWMD0800
1500	KDWMD1500
3000	KDWMD3000
ADAPTOR	KDADP

- 20 x 45H (M8)
- Designed for the inside areas of bowl, radial polishing machines, sink machines and hand held machines.
- It has a rubber inter layer for good polishing performance

FRANKFURT RESIN BOND PADS 92 x 90mm

Grit	Codes
50	KGS4026.00285
60	KGS4026.00286
120	KGS4026.00287
200	KGS4026.00288
400	KGS4026.00289
800	KGS4026.00290
1500	KGS4026.00291
3000	KGS4026.00292

- Non woven diamond polishing pads for renovation of Marble
- To be used on single head machine
- Wet use

FLEXIS FF RESIN BOND PADS 92 x 90mm

Grit	Codes
Coarse	KGS2014.03112
Medium	KGS2014.03098
Fine	KGS2014.03099
Very Fine	KGS2014.03100
Ultra Fine	KGS2014.030101

- Resin Bond pads for coarse and fine grinding
- Non-woven diamond pads for polishing
- No special adapters needed
- Easy to clean
- Perfect for small areas
- Deep natural gloss

3 STEP ULTRABOND PAD 100mm

Step	Codes
1 (red)	ALCUBP01
2 (yellow)	ALCUBP02
3 (green)	ALCUBP03

- The ultrabond technology allows you to shine and clean at the same time
- Adaptable to all scrubbers, floor and hand machines on the market.
- Coupling: Velcro

100mm/125mm SEBALD DRY GRINDING/POLISHING

Size	Grit	Codes
100mm	24/36	SEBD4024
100mm	60	SEBD4060
100mm	120	SEBD4120
100mm	220	SEBD4220
100mm	360	SEBD4360
100mm	500	SEBD4500
130mm	24/36	SEBD5024
130mm	60	SEBD5060
130mm	120	SEBD5120
130mm	220	SEBD5220
130mm	360	SEBD5360
130mm	500	SEBD5500

SEBALD RECON ABRASIVE

Grit	Codes
60	SEBRE40060
120	SEBRE40120
220	SEBRE40220
400	SEBRE40400
800	SEBRE40800
1000	SEBRE41000
1200	SEBRE41200
Lux/Light	SEBREPOL
Lux/Light	SEBREPOL1

- Available in 100mm or 125mm
- Made in Germany
- To be used on Recon/Granite edge polishing machine

SEBALD TORNADO MAGNETIC ABRASIVES

Grit	Codes
36	SEBTMA0036
120	SEBTMA0120
280	SEBTMA0280
400	SEBTMA0400
600	SEBTMA06/8
LUX	SEBTMALUX

- 4 Inch
- Magnetic lock
- Wet use
- Made in Germany

M 130 DX SINT 120

Grit	Codes
120	BIG1FP0106A
220	BIG1FP0108A
400	BIG1FP0114A
600	BIG1FP0116A
800	BIG1FP0118A
1000	BIG1FP0120A
SUFIER LUX	BIG1FP0122A

SEBALD HAND RUBBING BLOCKS

Grit	Codes
24/36	SEBRB024
60	SEBRB024
120	SEBRB024

FRANKFURT MAGNESITE BLOCKS

Grit	Codes
16	FIDFMB10
36	FIDFMB036
60	FIDFMB060
120	FIDFMB120
220	FIDFMB220
320	FIDFMB320
400	FIDFMB400
800	FIDFMB800
5 extra acid	FID5EA

AGING BRUSHES

100mm		125mm	
Grit	Codes	Grit	Codes
36	ALCAW036	36	ALCAW5036
46	ALCAW046	46	ALCAW5046
60	ALCAW060	60	ALCAW5060
80	ALCAW080	80	ALCAW5080
120	ALCAW120	120	ALCAW5120
240	ALCAW240	240	ALCAW5240
320	ALCAW320	320	ALCAW5320
500	ALCAW500	500	ALCAW500

- Aging Brushes are used on Natural Stone to give it a weathered or antiquated appearance
- Snail lock M14

FRANKFURT PUMICE HONING SEGMENTS

Grit	Codes
180	ALCFPHS180
320	ALCFPHS320
500	ALCFPHS500

PUMICE WHEELS HONING SNAIL LOCK/M14

100mm		125mm	
Grit	Codes	Grit	Codes
180	ALCPHW180	180	ALCPHW4180
320	ALCPHW320	320	ALCPHW4320
500	ALCPHW500	500	ALCPHW4500

PUMICE WHEELS HONING VELCRO 100mm

Grit	Codes
180	ALCPHWV4180
320	ALCPHWV4320
500	ALCPHWV4500

125mm HERMES SANDING/ POLISHING DISC

Grit	Codes
60	HERSD060
120	HERSD120
220	HERSD220
320	HERSD320
400	HERSD400
500	HERSD500
600	HERSD600
800	HERSD800
1200	HERSD1200

- 6 inch also available

230mm X 280mm HERMES-SANDING SHEET

Grit	Codes
60	HERSS060
120	HERSS120
180	HERSS180
220	HERSS220
240	HERSS240
320	HERSS320
400	HERSS400
800	HERSS800

SAIT ABRASIVE FIBRE DISC

Grit	Codes
36	AIADC036
60	AIADC060
120	AIADC120
280	AIADC280

- 178 x 22 mm
- Depressed centre

HERMES SANDING/ POLISHING BELTS

Grit	Codes
36	HERSB036
60	HERSB060
120	HERSB120
180	HERSB180
220	HERSB220
320	HERSB320
400	HERSB400
600	HERSB600
800	HERSB800

- 40t0 x 90 mm

SEBALD FELT PADS

Size	Colour	Codes
100mm	White	SEBF100/WH
100mm	Brown	SEBF100/BR
125mm	White	SEBF130/WH
125mm	Brown	SEBF130/BR

- Snail lock
- Made in Germany

SEBALD FELT PADS M14

Size	Codes
100mm	SEBF100/WM14
125mm	SEBF130/WM14

- High Quality felt Pad designed for use with polishing wax for polishing Marble, Granite & Engineered Stone

LOOSE LEAF CALICO BUFF

Size	Folds	Codes
100mm	50	ABCB04
100mm	150	ABCB4
152mm	150	ABCB6
203mm	150	ABCB8

TAPERED SPINDLE

Size	Codes
75 mm	SLTS

- For use with calico buff
- M14

SHINANO WET AIR POLISHER- M14 THREAD

Codes
IND2322WRE

- Wet polisher for polishing small faces of all stone
- Front handle for greater control
- 566L/min 20cfm
- Pad Size: 4" & 5"
- Spindle: M14
- Max Speed: 5000rpm
- Net Weight: 1.3kg
- Length: 230 x 93mm
- Air pressure 90 PSI - BAR: 6.21
- CFM 20, Litres: 566

TOUEI WET AIR POLISHER M14 THREAD - 4500RPM- JAPAN

Codes
TKIWS-6

- Variable speed
- 4500 rpm
- Spindle: M14
- Powerful air-motor allowing work for longer hours without breaks
- Rotation speed is 4500 rpm without load, ± 10%.
- Variable speeds
- Water fed from the (central water feed).
- CFM: 16, Litres: 460, PSI: 87, BAR: 6

WET AIR GRINDER SHINANO - JAPAN

Codes
IND2515L

- Grinder for cutting with 100mm (4") and 125mm (5") Blades
- Diameter: 100mm
- Spindle: M14
- Max Speed: 10000rpm
- Net Weight: 1.65kg
- Length: 230mm
- Air consumption 0.57m3/min
- Air pressure 90 PSI, BAR: 6.21
- CFM: 20, LItres: 566

PNEAUMATIC WATER FED AIR POLISHER

Codes
G-SPW-7

- Spindle Size: M14, Air Cons: 0.49 m3/min Max Speed: 4500, Sound Pre: 84 dBA, Weight: 1.17kgs Length: 266mm, Air Pressure: 90 psi
- Low vibrate and noise with excellent performance
- Gravity casting housing carries long duration of tool
- 3-section-shifting knob enables users to adjust frequency of air for reducing free speed
- Centre water feed function reduces dust, and improves environment protection
- Water valve can be adjusted for variable water-flow
- Includes a reversible side handle, exhaust muffler, air hose adapter and water valve with hose adapter
- CFM: 16.2, Litres: 460, PSI: 87, BAR: 6

WEKA DK1603 HAND HELD DRILL WITH STAND

Item	Codes
Hand Drill	TYR20040938
Stand	TYR109987400

- This is a high quality standard drill for permanent and professional operation
- Used by drilling and sawing companies in Europe, USA and Asia
- 2000w, 1 phase nominal power
- 20 - 160mm in stand
- 100mm max drilling diameter

WET FLUTE POLISHER

Codes
G-GPW-222Q

- 100mm Wheel diameter
- Max Speed 2500rpm
- Net Weight: 1.87kg
- Length: 330mm
- Air Cons: 0.51m3 / min
- Air Inlet: 1/4"
- Hose Size: 6.5mm
- Air Pressure: 90psi
- Sound Pressure: 95 dBA
- Vibration: < 2.5m / sec 2
- Wet Fluting Polisher - Polish to what ever finish required on Marble & Granite
- Precisely Finish Flutes on Drain Board, Fire Place Surrounds and other decorations
- CFM: 18, Litres: 510, PSI: 90, BAR: 6.21

"RHINO" EDGE PROFILE GRINDING MACHINE

Codes
ABEPM

- Multi-Grinding Machine is one of the highly effective economy multi purpose stone slab machines which is specifically designed to perform edging task.
- It is small, light weight, convenient and easy to operate
- The flexible and smooth roller system is highly useful for an operator.

125mm WET ANGLE GRINDER AL-1345W

Codes
IND1345W

- Has a lever throttle
- Disc Size M14 x 2.0
- Power 0.7kW 0.95 HP
- 10900rpm
- Air Inlet 1/4" NPT
- Weight 1.6kg
- With water attachment
- 20 CFM, Litres: 946,
- PSI : 90, BAR: 6.21

FLEX - WET STONE POLISHER M14

Codes
F/L12-3 100

- Lightweight and easy-to-use with powerful 950 Watts and especially sturdy gears for high torques . With ergonomic shaped grip for safe handling. The GFCI circuit breaker is integrated into the power cord.
- Max disc diameter: 115mm
- Speed without load: 3500rpm
- Power input: 950 Watt
- Power output: 600 Watt
- Weight: 2.40kg

Couplers
Tool holders
Adaptors

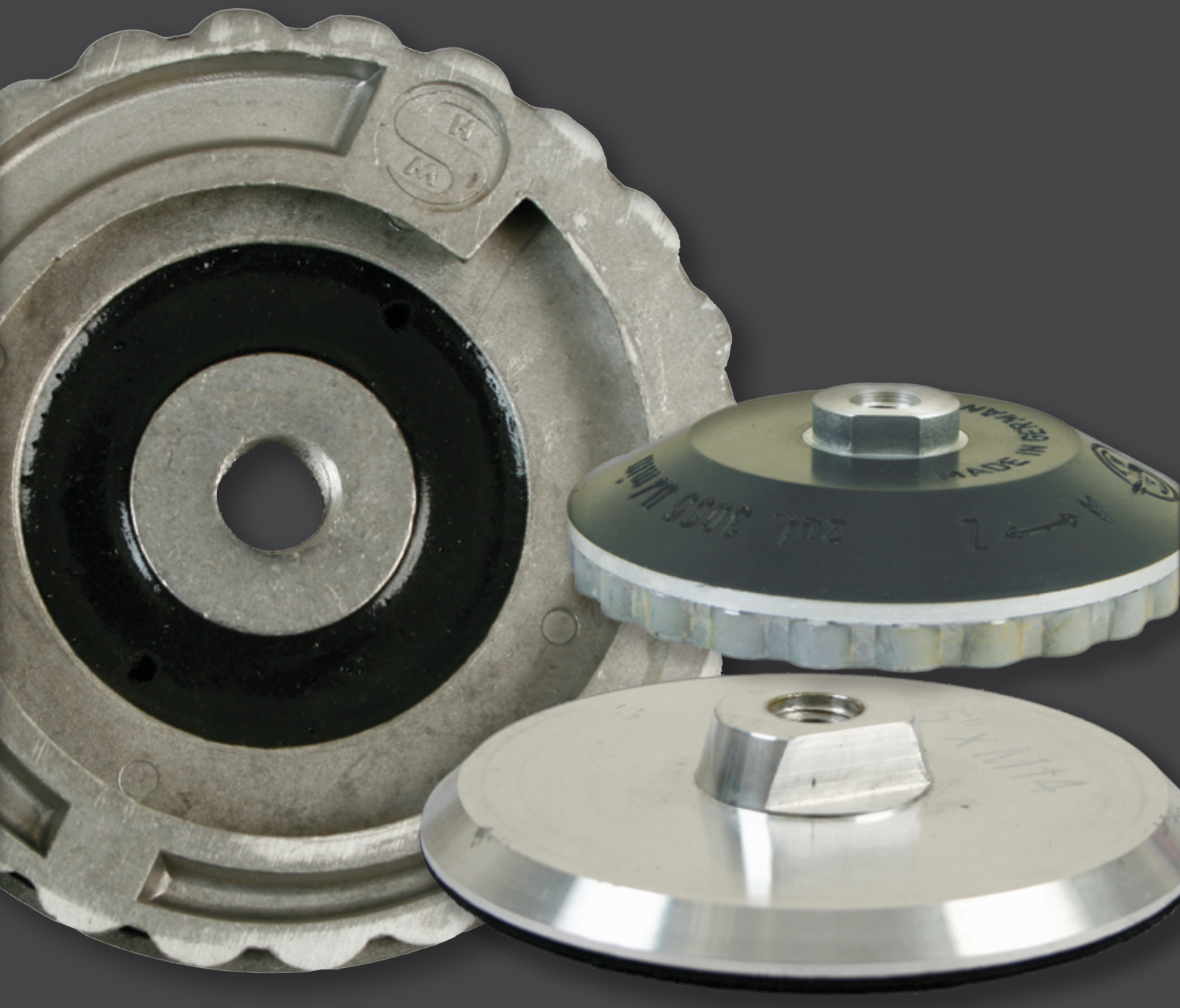

WATER SWIVEL CHUCK

Size	Codes
1/2" 1/2" BSP	FIDWS

- For normal drill machines on use for 1/2" BSP core drill

PNEUMATIC RUBBER DRUM ADAPTOR - 40 X 90MM

Type	Codes
Dyna Cushon	DYNAPW
Adapter 5/8 x M14	SLADP14

- For use with sanding/polishing belts

MAGNETIC TORNADO COUPLINGS

Size	Codes
80mm	BAV653815

- Easy & Quick Adaptation
- For use with Tornado Grinding Plates
- M14 Thread
- Made in Germany

POLISHING BELT ADAPTOR

Size	Codes
15mm	KGS8851.20006
50mm	KGS8851.20009
75mm	KGS8851.20016
M14 Mandrel	KGS8851.00546

- For use with polishing belts
- Expanding rubber wheel

VELCRO BACK PAD

Size	Type	Codes
125mm	Foam	KGS8851.10028
75mm	Flexy	BPVBPF3
100mm	Alloy	BPVBPA4
100mm	Flexy	BPVBPF4
100mm	X-Strong	KGS8851.10033
100mm	Alloy	BPVBPA5
100mm	Flexy	BPVBPF5

- For use with Sanding/Polishing Pads - Velcro Type

SNAIL LOCK VELCOR ADAPTOR

Size	Codes
100mm	KGS100SF
100mm	KGS130SF

- For use with Snail Lock Coupler/Polishing Pads - Velcro Type

SEBALD SNAIL LOCK COUPLER

Size	Codes
100mm	SEBSLC4
125mm	SEBSLC5

- M14 M16 M18 M20 M24 5/8 also available
- Threads for use on hand held machines & edge

BIGGI SNAIL LOCK COUPLER

Size	Codes
100mm	BIGSLC4
125mm	BIGSLC5

Consumables

Chemicals
Glues
Epoxy
Safety Gear

TENAX TRANSPARENT
SOLIDO/FLUIDO

Size	Codes
1 Ltr	TENTS
17 Ltr	TENTS17
1 Ltr	TENTL

- Excellent adhesion on Marble, Granite and Engineered Stone
- Transparent Honey Appearance
- Easy to colour

TENAX BIANCO & BIANCO 2

Size	Codes
1 Ltr	TENBIA
17 Ltr	TENBIA17
1 Ltr	TENBIA2
4 Ltr	TENBIA2/4

- Excellent adhesion on Marble, Granite and Engineered Stone
- White appearance
- Easy to colour

TENAX PAGLIERINO

Size	Codes
1 Ltr	TENPAG

- Excellent adhesion on Marble, Granite and Engineered Stone
- Beige appearance
- Easy to Colour
- Has a 100+ 2/3 hardener to Tenax ratio

TENAX MARBLE SUPER TRANSPARENT

Size	Codes
1 Ltr	TENSTM

- Excellent for White Marble or Onyx
- Pinky Paste appearance
- Easy to colour
- Has a 100+ 2/3 hardener to Tenax ratio

TENAX NERO

Size	Codes
1 Ltr	TENBL

- Excellent adhesion on Marble, Granite and Engineered Stone
- Black appearance
- Easy to Colour
- Has a 100+ 2/3 hardener to Tenax ratio

TENAX OPTICAL WHITE

Size	Codes
1 Ltr	TENSQU

- Excellent adhesion on Marble, Granite and Engineered Stone
- White appearance
- Easy to colour
- Has a 100+ 2/3 hardener to Tenax ratio

TENAX HUMUS

Size	Codes
1 Ltr	TENSQH

- Excellent adhesion on Marble, Granite and Engineered Stone
- Dark Brown appearance
- Easy to colour
- Has a 100+ 2/3 hardener to Tenax ratio

TENAX AGER

Size	Codes
1 Ltr	TENAGER

- Used as a colour enhancer
- Clear liquid appearance
- Doesn't yellow to sunlight
- No surface films

TENAX GEAR

Size	Codes
1 Ltr	TENG

- Colour enhancing penetrating sealer
- Food safe
- Suitable for Marble, Travertine, Granite and Engineered Stone
- Water and oil resistant

TENAX HYDREX

Size	Codes
1 Ltr	TENHYD

- Used as a penetrating sealer
- Used on polished Marbles
- Won't change the Stone colour

TENAX - RIVO 15

Size	Codes
1 Ltr	TENR
4 Ltr	TENR4

- Recommended for Metal - Stone, Concrete, Ceramic Stone and stone - honeycomb panels
- Straw colour appearance
- Easy to colour
- Has a 1 + 1 ratio

TENAX - STRONG EDGE

Size	Codes
1 Ltr	TENSEA
1 Ltr	TENSEB

- Extra clear epoxy
- Solvent free
- Recommended for Marble, Granite and Agglomerate
- Has a 100 + 50 ratio

TENAX - UNIBLACK 2

Size	Codes
1 Ltr	TENUBL
4 Ltr	TENUBL4

- Designed to blacken polished granite without enhancing the gloss
- Black liquid Appearance
- Restores Blackness on dull material can be applied manually or with a machine

TENAX - PROTEX

Size	Codes
1 Ltr	TENPR
4 Ltr	TENPR4

- Water - oil repellent sealer
- Approved for food contact
- Used on stone, porous materials and grouts

TENAX - JET SPRAY

Codes
TENJS

- Used for an Auto polish varnish
- Used on raw Marble, Granite, Onyx and Engineered Stone
- Not to be used outdoors or on floors

TENAX - CERA FLUIDA/PASTA

Size	Codes
1 Ltr	TENLW (Liquid)
1 Ltr	TENSW (Solid)

- Concentrated liquid wax
- Very penetrating
- Dries quickly

TENAX - NEROPLUS NERO/TRANSPARENT

Size	Codes
1 Ltr	TENBLP (Nero)
1 Ltr	TENBLPT (Transparent)

- Used to even out the colour of black granites
- Application allows darkening of the material making the surface more homogeneous and shiny

TENAX - SKUDO GRANITO/ MARMO 1L

Size	Codes
SKUDO GRANITO	TENSKG
SKUDO MARMO	TENSKM

- Water based water-oil repellent sealer
- For use on Marble, Granite, Stones and agglomerates
- Approved for food contact
- Yellowish transparent liquid

TENAX - POLYGRES

Size	Codes
1 Ltr	TENPGRES

- For use on Neolith, Dekton and Porcelain
- White Appearance
- Very strong and fast

TENAX TITANIUM KNIFE GRADE

Size	Codes
1 Ltr	TENTKG

- Excellent adhesion in short amount of time
- Superb on white and light material
- Very polishable
- Colors easily

TENAX - TOPFILL

Size	Codes
1 Ltr	TENTOPFILL

- Used for bonding and grouting of precious Marbles, Granites, Glass, Ceramic and Quartz
- Super transparent
- Low yellowing to sunlight
- Excellent adhesion
- Low wettability

TENAX - DOMO 10

Size	Codes
1 Ltr	TENDOMO

- Used for gluing and resining stone material
- Very high adhesion
- Glue on wet surfaces
- Great for bonding mixed materials
- Great on cold weather

TENAX - BLACK 67

Size	Codes
1 Ltr	TENBL67

- Used to treat uniformly and increase the colour of black granites
- Suitable for Black Zimbawe or similar stones

TENAX - UNIVERSAL COLOUR KITS

Size	Codes	Colour
Set of six	TENNCK	All
75 ml	TENCWH75	White
75 ml	TENBR75	Brown
75 ml	TENGRE75	Green
75 ml	TENCBL75	Black
75 ml	TENCYL75	Yellow
75 ml	TENCB75	Blue

- They are easy to mix
- Universal colouring

TENAX - HARDENER

Size	Codes
45 ml	TENH45
180 ml	TENH180

- Used to harden the Tenax glue
- Able to colour with the glue

TENAX - QUARTZ TONER

Size	Codes
1 Ltr	TENQTONER

- Stain resistant enhancer
- Excellent water-oil repellent properties
- Fast drying
- Approved food product

TENAX - WATERPROOF UNIVERSAL

Size	Codes
1 Ltr	TENWP

- Water oil repellent sealer for Marble, Granite
- Doesn't change the natural properties of the material
- Resistant on high alkalinity supports

TENAX - POWERBOND

Size	Codes	Colour
215 ml	TENPBW	White

- Excellent adhesion
- Ultra rapid
- Excellent stability to sunlight
- Zero VOC
- Use on Ceramic, Marble, Granite and Quartz
- For indoor and outdoor use
- No yellowing
- **More colours available refer to pages 77 & 78**

TENAX - MASTIDEK FAST OUTDOOR

Size	Codes	Colour
215 ml	TENMDD	Danae
215 ml	TENMDK	Kelya
215 ml	TENMDV	Valterra
215 ml	TENMDZ	Zenith

- **Developed specifically for Dekton Miters & Seems**
- Excellent adhesion
- Ultra rapid
- Shiny finish
- No yellowing / UV Stable
- Dripless

TWIN GUN DISPENSER

Codes
BGSFHC6-400Z

MEGAPOXY - NORMAL AND QUICKSET

Size	Codes
4 Ltr	VIMPM04
20 Ltr	VIMPM20
4 Ltr	VIMPF04
20 Ltr	VIMPF20
4 Ltr	VIM69/04
20 Ltr	VIM69/20
4 Ltr	VIMPFG04
4 Ltr	VIMB04
20 Ltr	VIMB20
4 Ltr (Kit)	VIMHX
4 Ltr (Kit)	VIMH

MEGAPOXY (EPOXY) INFORMATION CHART

Megapoxy 69

HIGH STRENGTH IMPACT RESISTANT EPOXY ADHESIVE

MEGAPOXY 69 is a translucent clear non-sag gel type epoxy. Ideal for structural bonding of Metals to Metals, metals to Concrete and Masonry, assembly of Granite and Marble fabrications, and many other civil engineering applications requiring superior bond strengths.

MEGAPOXY 69 is also ideal for structural timber joinery and applications in the marine environment. It retains its high strength after repeated high impact forces.

Availability:

MEGAPOXY 69 is available in 4 litre and 20 litre kits.

MEGAPOXY 69 is also available in liquid gel form and rapid set versions.

Megapoxy PM

GAP FILLING EPOXY PASTE ADHESIVE FOR CIVIL ENGINEERING USE

MEGAPOXY PM is specially formulated structural non-sag epoxy filling paste and adhesive. This easy to use two-part epoxy sets after mixing to an extremely durable adhesive ideal for bonding Natural Stone, Concrete, Steel, Timber, Glass and Masonary. Its easy to use 1:1 mixing make it suitable for on site applications.

Availability:

MEGAPOXY PM is available in 4 litre & 20 litre kits. Shelf life of unopened kits is 2 years minimum. Product should be stored in cool dry store rooms.

Megapoxy PF

RAPID SET EPOXY PASTE ADHESIVE FOR CIVIL ENGINEERING APPLICATIONS

MEGAPOXY PF is a rapid set epoxy adhesive which sets in three to five minutes and attains more than half its ultimate strength within 15 minutes of mixing. Megapoxy PF "hardens-as-you-hold-it" for immediate on the spot emergency repairs to tanks, pipes, machinery, Concrete structures etc.

Availability:

MEGAPOXY PF is available in 4 litre and 20 litre kits.

Megabond

MEGABOND is a high strength two component epoxy adhesive. Megabond is easy to use and spreads readily with a notched trowel.

Excellent for bonding Natural Stone & tiles to all Masonry surfaces including Cement sheet, Cement render, Plasterboard, Timber and is suitable for both interior & exterior applications.

Additional Information:

- Megapoxy comes in two forms a gel and a paste.
- What is the difference between gel and paste? Gel is easier to work with as it spreads more freely however cure time is less (recommended for colder seasons and someone with experience)
- For further details call us on (03) 8786 3113 please ask for sales

MEGAPOXY PIGMENT PASTE

Size	Codes	Colour
500g	VICBE	Beige
500g	VICRD	Red
500g	VICYL	Yellow
500g	VICBR	Brown
500g	VICGE	Green
500g	VICBL	Black
500g	VICWH	White

ACTICHEM SEALERS

Size	Codes	Type
500 ml	AP150.005	T&G Spot Remover
500 ml	AP176.005	Solvent Sealer Gold (solvent based)
500 ml	AP177.005	Stone Sealer Gold (water based)
500 ml	P404.005	Power-strip
5 L	AP404.05	Power-strip5L

- Water based suitable for food preparation areas
- Solvent generally for outdoor usage
- stone sealer Gold suitable for Marble, Limestone, Travetine, Granite & Bluestone

REULIN H POLISHING POWDER - GRANITE

Size	Codes
2kg	ALREUPP2
25kg	ALREUPP25

FIDAL WAX BARS SOLID

Colour	Codes
White	FIDWAXW
Black	FIDWAXB
Neutral	SEBWAXN

DIA GLO BUFFING POWDER

Size	Codes
500g	ATDGD
500g	ATDGL
500g	ATDGM

- Granite dark
- Granite light
- Marble
- Available in 5 kg

PELTOR EAR MUFFS

Brand	Codes
Peltor	HEEARMUF
Pro Choice	PSEMPYTS

- Class 5 rated for high noise

EAR PLUGS

Type	Codes
Pocket Pack	PSEP/C
Corded	PSEP/UC

- Uncorded ear plug - box of 200
- Corded - box of 100

NITRILE GLOVES

Size	Codes
Large	HENITGLO
X/Large	HENITGLOXL

- Comes in box of 100 gloves (50 pairs)

PVC APRONS

Type	Codes
H/Duty	HEAPRH/D
Black PVC	3ASMA048-002T

PVC SLEEVES

Type	Codes
White PVC	HEPVCSL

FULL FACE MASK

Brand	Codes
Drager X-plore 6300	HEPDFFM6300

- "Drager x-plore 6300 full face mask (S- R55800)

SILICONE HALF MASK COMPLETE

Brand	Codes
Moldex Series 8112	HEPMHM

- Spare filter cartridges available

SUNDSTROM RESPIRATOR

Brand	Codes
Sundstrom	AS/SR100KIT

DUST MASKS

Pieces	Codes	Type
20	HE2200RES	P2200 P2
10	HE2300RESV	P2300 P2
20	PSDMPC301	Eco P1
20	PSDMPC305	Eco P2

- Respirator
- Respirator with valve
- Dust mask

SAFETY SPECS/ GOGGLES

Type	Codes
Clear	HEPSG/C
Tinted	HEPSG/T
Clear Goggles	PS3700

- Anti fog
- Foam fit

CARTRIDGE & PAPER FILTER

Codes
AS/SR221

CLAMPS

Size	Codes
100mm	MCL100G
150 x 80mm	MCL150
250 x 1200mm	MCL250
300 x 120mm	MCL300

MITREFORMA 130 - 320

Size	Codes
130mm	FAMF130
320mm	FAMF320

TAPE MEASURE STAINLESS STEEL

Size	Codes
7.5M	HCDTM

- Ideal for stone yards and wet conditions
- Coated carbon steel blade
- Stainless steel internals
- Wide blade

RAZOR BLADES

Pieces	Codes
100	CRRAZSE

- Set of 100
- Made in USA

STAINLESS STEEL SQUARE 400 X 600

Size	Codes
400 x 600mm	WIS4/6SQ

- Ideal for the stone yards and wet conditions

SMALL TOOLS - TROWELS

Size	Codes
12 mm	MST12
18 mm	MST18

SLAB WEDGE

Codes
3ASW63

FIBRE GLASS REINFORCING

Size	Codes
100m x 10mm x 3mm	BAV540500

- Made in Germany
- Reinforces narrow section of stone

HB FULLER SILICONE

Size	Codes	Type
300g	HBSIL	Translucent
300g	HBSILW	White

- 20 per box
- Natural cure
- Non acetic

STEEL WOOL

Grit	Codes
00	SIF160
4	SIF164

- Each 500g

LUMBER CRAYON MARKERS

Colour	Codes
Black	TTLCBL
Red	TTLCR
Blue	TTLCB
Yellow	TTLCY

- Engineered for smooth marking on stone
- Lumber and Metal

STAEDTLER CHINA GRAPH PENCILS

Colour	Codes
Black	ASPENB
Red	ASPENR
White	ASPENW
Green	ASPENG
Yellow	ASPENY

- Colours come in a box if 12

WHITE PENS

Size	Codes
12 ml	ASPEN

CARPENTER PENCILS

Size	Codes
20 mm	MPEN

PVC CLOTH TAPE

Size	Colour	Codes
48mm x 50M	Blue	JTPCTAPE/50
48mm X 25M	Yellow	JTPCTAPE

- 0.13mm x 48mm x 50M
- Jointing/sealing tape
- Flame retardant
- lead free

MASKING TAPE 3M

Size	Codes
24mm	AIAMT24
36mm	AIAMT36
48mm	AIAMT48

- 50m rolls

AIR TOOL LUBRICANT

Size	Codes
250 ml	IND/OIL
20 L	PLPKIHMZF022020

LUBRICATING SET FOR DIAMOND MILLING CUTTERS

Codes
ITD2699930

- Water attachment
- Will fit 7 different sized drills from 4 to 10
- For portable/constant water to keep blades or core bits cool on site

Chisels

Hammers

Clubs

Mallets

Pneumatic

CUTURI AIR HAMMERS

Size	Codes
U	BAVCUUHAM
T	BAVCUTHAM
S	BAVCUSHAM
R	BAVCURHAM
Z	BAVCUZHAM
A	BAVCUAHAM

- Europes most popular air botlle/hammer

BAVARIA PISTOL HAMMERS

Model	Codes
GS45	BAV404510
GS50	BAV415010

- GS45/F - All purpose soft starting hammer for V- cut lettering & sculpting work
- GS50 - operating light flat & pointed chisels, hammering of the ground raised characters, edging etc

PLUGS & FEATHERS

Size	Codes
14mm x 95mm L	BAV381400
18mm 150mm L	BAV381800
22mm 150mm L	BAV382200

- Consisting of one plug and two feathers

CARBIDE PNEUMATIC BUSH HAMMER

Size	Codes
14 x 14mm (2x2)	BAV260222
30 x 30mm (3x3)	BAV260809

- Used to create texture on stone

CARBIDE LETTERING CHISELS

Size	Codes
4mm HH	BAV108104
8mm HH	BAV108108
12mm HH	BAV108112
16mm HH	BAV108116
20mm HH	BAV108120
4mm MH	BAV108204
8mm MH	BAV108208
12mm MH	BAV108212
16mm MH	BAV108216
20mm MH	BAV108220

- Octagonal shaft shaping
- HH - Hammer Head, MH - Mallet Head

CARBIDE PNEUMATIC CLAW CHISELS

Size	Codes
18mm - 4pt	BAV240184

- Octagonal shaft shaping

CLEAVING INSERT HOLDERS

Size	Codes
50mm	BAV330405

- With mallet head, without inserts

CARBIDE CARVING CHISELS

Size	Codes
4mm HH	BAV101204
8mm HH	BAV101208
12mm HH	BAV101212
16mm HH	BAV101216
20mm HH	BAV101220
4mm MH	BAV101104
8mm MH	BAV101106
12mm MH	BAV101112
16mm MH	BAV101116
20mm MH	BAV101120

- Octagonal shaft shaping

CARBIDE POINT

Size	Codes
24 x 24mm HH	BAV110124
20 x 20mm MH	BAV110220

- Octagonal shaft shaping

CARBIDEC CHISELS

Size	Codes
25mm HH	BAV120125
30mm HH	BAV120130
40mm HH	BAV120140
20mm MH	BAV120220
25mm MH	BAV120225
30mm MH	BAV120230
40mm MH	BAV120240

- Designed to withstand heaviest work
- Edge 18 up to 20mm made of octagonal steel rods
- Edge 25 up to 40mm turned of flat-bar steel rod
- HH - Hammer Head, MH - Mallet Head

CARBIDE PITCHER

Size	Coddes
30mm	BAV145130
40mm	BAV145140
50mm	BAV145150
60mm	BAV145160

CARBIDE CLAW CHISELS

Size	Codes
14mm	BAV140143
18mm	BAV140184
20mm	BAV140203
26mm	BAV140264
32mm	BAV140325
38mm	BAV140386

- Octagonal shaft shaping

CARBIDE PUNCH

Size	Codes
18 x 18mm HH	BAV112118
24 x 24mm HH	BAV112124

CARBIDE SPLITTING TOOL

Size	Codes
80mm HH	BAV125180

CARBIDE MARK SCRAPER

Size	Codes
160mm Long	BAV150100

CARBIDE CARVING

Size	Codes
10 X 10mm MH	BAV111110

- Octagonal shaft shaping

CURVED MASONS CLUB

Size	Codes
750 g	BAV350007
1 kg	BAV350010

- Ashwood handle
- Made of hardened steel
- Curved shaping
- Sharp edges

WOODEN MALLET

Size	Codes
100mm	BAV620010
120mm	BAV620012

- Made of air-seasoned white beech with glued handle
- Transparent protective varnish

SYNTHETIC MALLET

Size	Codes
80mm	BAV621080
130mm	BAV621130

- Made of long-life synthetic material
- Insensitive to moisture and heat
- Wooden handle

IRON MALLET

Weight	Codes
500g	BAV623050
1kg	BAV623100

- Made of hardened steel
- Designed for transfer of force like a hammer sledge without damaging the tools' mallet heads

CARBIDE LUMP HAMMER

Size	Codes
40mm Blade	BAV177115
50mm Blade	BAV177125

- Ashwood handle
- Two carbide blades at one face

CARBIDE SCORING HAMMER

Size	Codes
30mm	BAV175030
40mm	BAV175030

- Ashwood handle
- 12mm tungsten carbide blade
- hammer face lightly crowned, hardened and polished

STONE SPLITTING HAMMER

Size	Codes
2kg	BAV353020

- Ashwood handle
- Made of hardened steel

CARBIDE SCULPTOR'S PICK

Size	Codes
0.8kg	BAV176001

- Ashwood handle
- 8 X 28 mm Carbide point

ELECTROPLATED SHARPENING BLOCK - FOR CHISELS

Grit	Codes
200	DP0200FTS
120	BAV632000
400	BAV632002

CARBIDE HAND CHISEL

Size	Codes
16mm	TH-CHC58
19mm	TH-CHC34
22mm	TH-CHC78

CARBIDE DETAIL CARVING CHISEL

Size	Codes
3mm	TH-CHC18
5mm	TH-CHC316
6mm	TH-CHC14

- 8mm Stock

CARBIDE HAND POINT

Size	Codes
10mm	TH-CHP38
16mm	TH-CHP58
19mm	TH-CHP34
25mm	TH-CHP1

CARBIDE TRIMMING HAMMER

Weight	Codes
907g	TH-HTHDCT

- Wooden Handle included
- 1 x TC Blade & Concave face w/2 TC Blades

CARBIDE PN. CARVING CHISEL

Size	Codes
6mm	TH-CC1212F14NS-D
12.7mm	TH-CC1212F12NS-D
16mm	TH-CC5812F58NS-D

CARBIDE PN. CARVER'S DRILL

Size	Codes
3mm	TH-121218
6mm	TH-121214
10mm	TH-121238

For more information on Trow & Holden products please contact the store on 03 87863113

TROW & HOLDEN COMPANY
FINE STONEWORKING TOOLS

CARBIDE HAND TRACER

Size	Codes
50mm	TH-CHT12
64mm	TH-CHT1118212
76mm	TH-CHT1183
102mm	TH-CHT1184

- 28mm Shank

ROUND HAND HAMMER

Weight	Codes
456g	TH-HCHR1
680g	TH-HCHR112
907g	TH-HCHR2

- Wooden Handle

HAND HAMMER

Weight	Codes
680g	TH-HCH112
907g	TH-HCH2
1250g	TH-HCH234

- Wooden Handle included
- Hardened Steel
- Oval eve

CARBIDE PN. BUSH HAMMER

Size	Codes
9 Point	TH-CJ1212-9

- 12.7mm Stock

DETACHABLE STRIKING CAP

Size	Codes
12.7mm	TH-S-CAP

- 12.7mm Shank

BARRE PN. HAMMER

Weight	Codes
1.25g	TH-PT12BTH

- 12.7mm Shank

For more information on Trow & Holden products please contact the store on 03 87863113

TROW & HOLDEN COMPANY
FINE STONEWORKING TOOLS

Transport & Handling

Lifting Equipment

Storage

Racking

ONE STOP A-FRAME

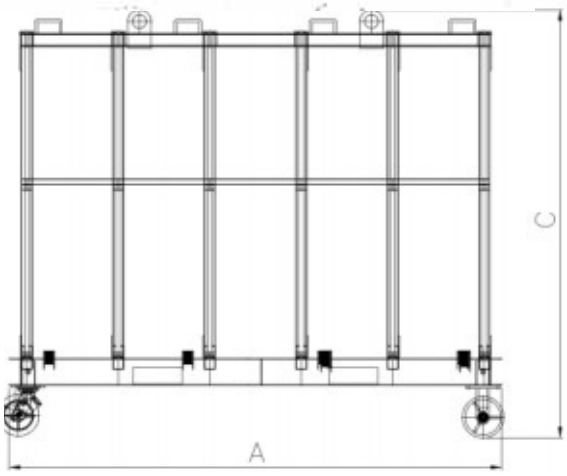

Model Number	3AOSA6135	3AOSA7247	3AOSA7263	3AOSA8763	3AOSAO9679	3AOSA8756
Length mm (A)	1540	1810	1810	2190	2410	1810
Width mm (B)	975	1100	1100	1100	1220	1100
Height mm (C)	1285	1585	1985	1985	2390	1805
Height mm (D)	890	1200	1600	1600	1975	1420
Base mm (E)	280	350	350	310	335	310
Net Weight kg	148	171	215	210	270	226
W.L.L Forklift kg	2000	2000	2000	2000	2000	2000
W.L.L Rolling kg	1000	1000	1000	1000	1000	1000

- Slabs are placed on a special rubber profile and secured with 4 ratchet securing bars
- Contains an extra storage section in the centre. Ideal for storing tools, splash backs etc.
- Frame features 2 eyelets which allows it to be picked up by an overhead crane
- Built in brackets on all sides for forklift transport
- Four 6" heavy-duty removable casters included

DEMOUNTABLE FRAME

Codes

3ADAF200-1500W / 3ADAF400-1500W

- This style of Frame can be unloaded from a truck with a forklift or crane then mounted directly onto the cart.
- Lined with white rubber for maximum protection of materials
- Materials placed on rubber profiles are secured with 6 adjustable locking bars
- Width of slab storage base area on each side - 361 mm
- Working load limit -1000 kg
- Net weight - 123.5 kg
- Packaging dimension - 1560x1135x230 mm

ONE STOP HIGH 'A' FRAME

Codes

3AOSHA7236W

- Sturdy design to prevent tipping
- Keeps your finished works high off the ground
- Rubber strips mounted on bottom and back supports, to prevent slippage
- Casters for easy movement around the warehouse (removable)
- Collapsible designed to save on freight costs
- Dimensions: 1600 x 1100 x 1565mm

HIGH A FRAME WITH PULL HANDLE

Codes

3AOSHA7236T/W

- A heavy duty design, keeps the slab high off the floor.
- White rubber on platofrm and back to prevent scratch and damage
- 2 fixed and 2 swivel castors wirh pull handle
- 1900L x 1000W x 1800H
- 260mm Slab rest

TRUCK COLLAPSABLE 'A' FRAME

Codes

AUTAF060H

- This style of Frame can be unloaded from a truck with a forklift or crane then mounted directly onto the cart.
- Lined with white rubber for maximum protection of materials
- Max load capacity 30,000kg
- Weight 300kg
- Length 18000mm
- Width 1700mm
- Height 2100mm

SLAB BUGGY (SINGLE SIDED)

Codes
3ASBG800W

- Max Load: 362kg
- Length: 1193mm
- Width:635mm
- Height:1168mm

SLAB BUGGY (DOUBLE SIDED)

Codes
3ADSB1320W

- Max Load: 575kg
- Length: 1370mm
- Width: 800mm
- Height: 1175mm

SINGLE SIDED BUGGY WITH LOCKING BAR

Type	Codes
Solid wheel	3ASSP1220PS
Pneumatic wheel	3ASSP1220P

- Max Load: 362kg
- Length: 1193mm
- Width: 635mm
- Height: 1168mm)

V CART

Codes
ABVCART

- For storing and transporting slabs easily
- Compact structure is designed with four 6" heavy duty polyurethane swivel casters
- Ables positioning of slabs in any direction for any purpose
- Poles and base are rubber lined to protect your material from scratches and chipping

RHINO SLAB RACK

Codes
3ARSR10RW

- Length: 3014mm (118.6")
- Width: 172mm (6.7")
- Height: 1500mm (59")
- Between posts - Max capacity: 820kgs (4004 lbs)
- Net weight: 141.5kgs (311 lbs)
- 20mm Thick Hard Rubber on Base and Uprights
- 6 Base Plates for Dynabolts and Carry Handles
- Remnant slab rack also available code: ABRES27

BUNDLE RACK

Codes
3ABSR101

MULTI FLIP TROLLEY

Codes
3AMPT15639W

- Designed to make your work more efficient
- Table top tilts from being flat to various degrees for user to work more comfortably
- Comes with four swivel casters making transportation easy
- Max Load: 300kg

KITCHEN PROCESSING TABLE

Codes
3AKPT8340W

- Our processing table is designed to make your work more efficient
- The table top tilts from being flat to varies degrees for you to work more comfortably
- Can handle 1/2" slab easily
- Height can be adjusted from 29" to 39", length to 79" and tilts a t 2 angles either 45 degree or 76 degree
- Comes with four 6" heavy-duty casters that make the transportation easier
- Collapsable design created to save on freight costs

ADJUSTABLE WORK TABLE

Codes
3AFTA-W

- Table is designed to make your work more efficient. The table top tilts from being flat to various degrees for user to work more comfortably. It can handle slabs with different thickness.
- More stability for the inconvenience of working with sink-hole cut-outs by adjusting four ended levelling posts.
- It comes with the four locking removable casters that make the transportation easier.
- Length 2000mm, Width 600mm, height 1000mm, Net Weight 104kg

WORK TABLE WITH CASTERS

Codes
3AWT7523CW

- Rubber-lined, to protect your polished surfaces while working on the edges
- The rubber lining can be easily replaced when worn
- Built in brackets allow you to create different work stations
- Independent adjustable feet
- Collapsable for easy transport
- Constructed on 18 gauge 2" x 2" square tubing
- Dimensions: 1935 x 614 x 995 - 1015mm
- Loading capacity: 300kg / Net weight: 56kg

TRANSPORT FRAME 6135

Codes

3AOSA6135

- It is designed for storing and transporting materiaal/ slabs in the workshop. - The rubber lining will protect your slab from chip and scratches.
- In adition, there are 4 securing bars with straps and ratchets to keep your slabs secure.
- Four castors are easily removable

Length (mm)	Width (mm)	Height (mm)	W.L.L (kg)
1544	976	1282	2000

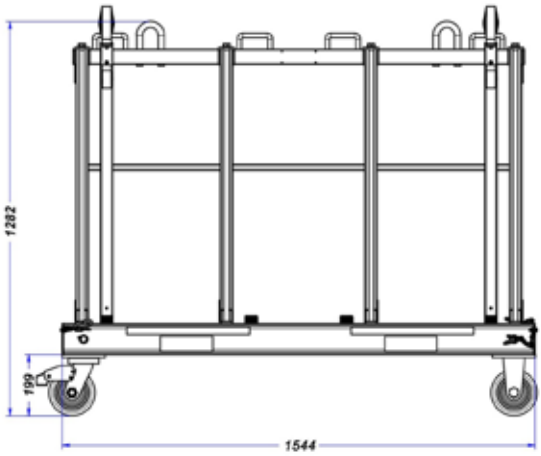

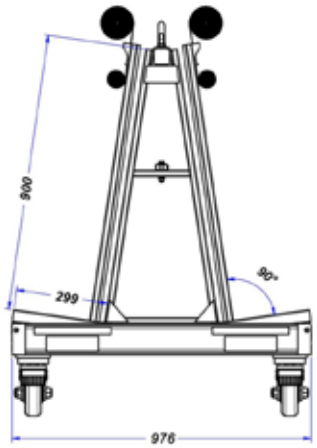

TRANSPORT FRAME 7247

Codes

3AOSA7247

- It is designed for storing and transporting materiaal/ slabs in the workshop. - The rubber lining will protect your slab from chip and scratches.
- In adition, there are 4 securing bars with straps and ratchets to keep your slabs secure.
- Four castors are easily removable

Length (mm)	Width (mm)	Height (mm)	W.L.L (kg)
1824	1100	1550	2000

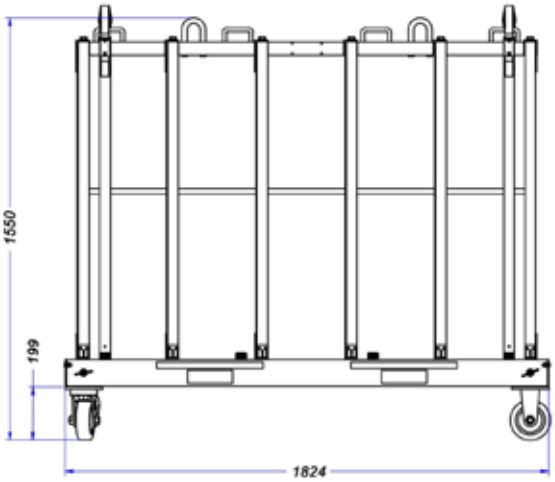

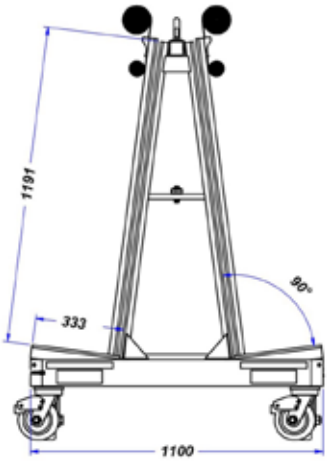

TRANSPORT FRAME 7263

Codes

3AOSA7263

- It is designed for storing and transporting materiaal/ slabs in the workshop. - The rubber lining will protect your slab from chip and scratches.
- In adition, there are 4 securing bars with straps and ratchets to keep your slabs secure.
- Four castors are easily removable

Length (mm)	Width (mm)	Height (mm)	W.L.L (kg)
1824	1100	1986	2000

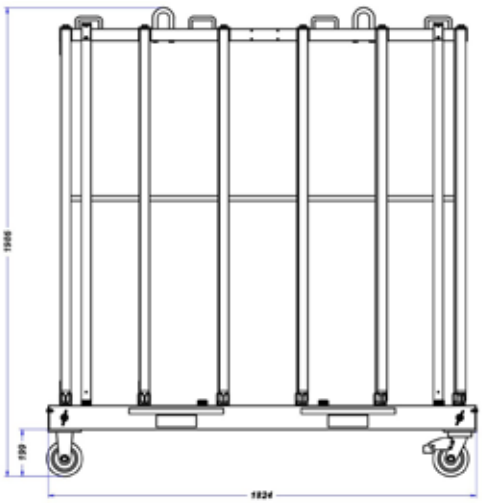

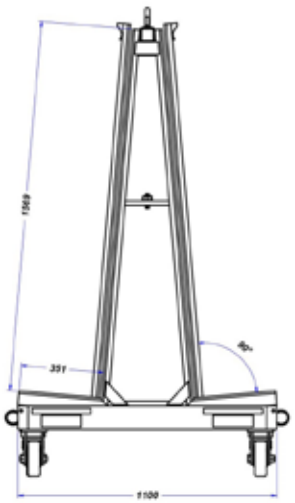

TRANSPORT FRAME 8763

Codes

3AOSA8763

- It is designed for storing and transporting materiaal/ slabs in the workshop. - The rubber lining will protect your slab from chip and scratches.
- In adition, there are 4 securing bars with straps and ratchets to keep your slabs secure.
- Four castors are easily removable

Length (mm)	Width (mm)	Height (mm)	W.L.L (kg)
2194	1100	1282	2000

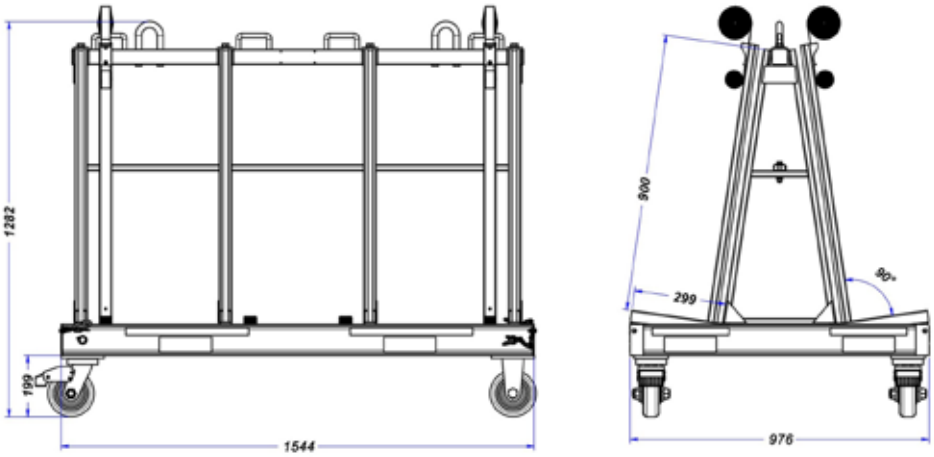

TRANSPORT FRAME 9679

Codes

3AOSA9679

- It is designed for storing and transporting materiaal/ slabs in the workshop. - The rubber lining will protect your slab from chip and scratches.
- In adition, there are 4 securing bars with straps and ratchets to keep your slabs secure.
- Four castors are easily removable

Length (mm)	Width (mm)	Height (mm)	W.L.L (kg)
2400	1200	2380	2000

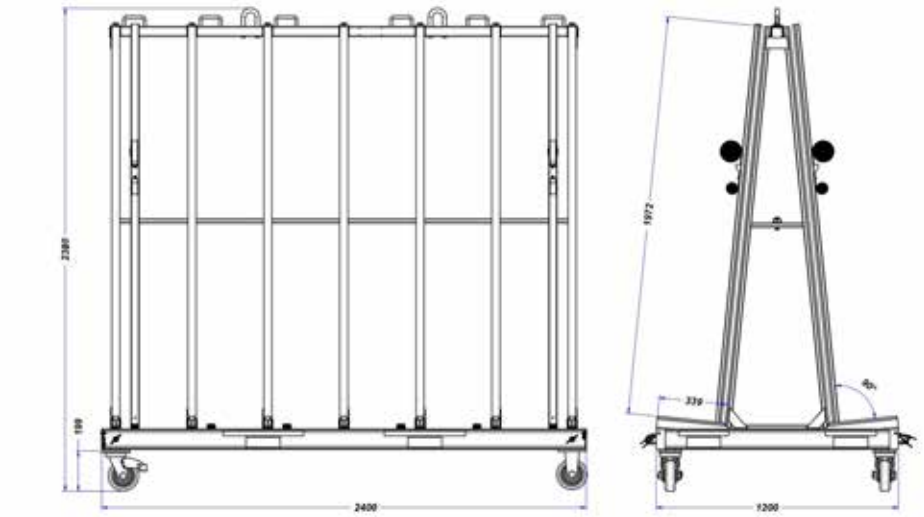

TRANSPORT FRAME 8756

Codes

3AOSA8756

- It is designed for storing and transporting materiaal/ slabs in the workshop. - The rubber lining will protect your slab from chip and scratches.
- In adition, there are 4 securing bars with straps and ratchets to keep your slabs secure.
- Four castors are easily removable

Length (mm)	Width (mm)	Height (mm)	W.L.L (kg)
2194	1100	1282	2000

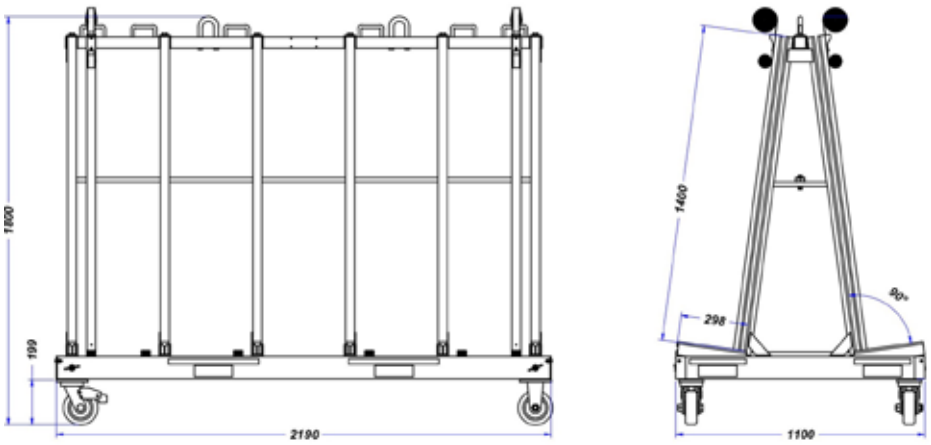

FORKLIFT JIB STANDARD

Size	Codes
UP TO 2.5m	3AFJ-25

- For use with Slab Lifter
- Designed for the stone industry, this jib has been made for use on 2 & 2.5 Tonne forklift trucks
- With its telescopic boom, it offers versatility with maximum visibility for the driver
- Full extend reach up to 2.5m

SPREADER BEAM

Codes
3ASB106M6

- Designed for moving slabs around the workshop
- Can be used for loading and unloading containers
- Max capacity: 4500kg
- Length: 2700 mm
- Width: 112 mm
- Height: 488 mm

SLAB LIFTER

Size	Codes
15-50mm	ABL50/W
20-75mm	ABL75
20-75mm	ABL75/WT
20-60mm	ABL60W

- For lifting 15 to 75mm thick material (SWL 1200kg)
- These clamps with their rubber-lined jaws have been developed to handle material in slab or sheet form, stacked in racks, without damaging the material's surfaces. They have a number of advantages over the common clamping devices.

CARRY CLAMPS

Codes
LYNCCL

- Carry clamps are designed for safely lifting and transporting stone slabs without using a forklift. Fully vulcanized rubber pads provide extra grip and prevent damage to slabs. The weight of the clamp places sufficient clamping force for a simple lift.
- By eliminating the use of a forklift, the carry clamps

SELF-LOCKING DOLLY- SLT60

Codes
AUSLT60-W

- Self-locking dolly is designed for moving stone slabs at work sites. It is made with Pneumatic tires to make transporting slab easier in different moving surface. The built-in auto-grip is ideal for secure transporting slabs within the worksite.
- More efficient with compact design, self-clamping capability.
- The clamping jaws are covered by rubber to protect the stone slabs.
- Length 320mm, Width 293mm, Height 307mm, Grip Range 0-130mm, Net Weight 15kg.

SKY RIDER LIFTER- ASL20A

Codes
AUASL20A-W

- Sky Rider Lifter Automatic is designed to clamp and move the slab (e.g stone, granite, marble, porcelain, counter top, etc.) and other sheet materials in workshops, warehouses, work sites, and so on.
- Clamp plates Opening and Closing mechanism is fully automatic.
- Length 316mm, Width 122mm, Height 262mm, Grip Range 0 - 22mm, Net Weight 8.7kg & Work Load Limit 500kg

TUG DOLLY - ATD25

Codes
AUTD25-W

- The main body is made of aluminium, lightweight, and easy to handle with good portability. Tug Dolly is able to carry a big load, capacity up to 450kg.
- With the four-solid-wheel structure, Tug Dolly is unshockable and very easy to handle as well as help slabs avoid damages.
- Length 710mm, Width 382mm, Height 308mm, Grip Range 0-60mm, Net Weight 10kg & W.L.L. 250kg

LAMINATING CLAMPS

Size	Codes
0.9M	ABLC090
1.2M	ABLC120
1.8M	ABLC180

- Fast and Effective / Secure and Safe / Easy to Use / Minimal Labour
- Lamination Clamps are designed for holding multiple slabs together while they are laminated and glued. The simple design of the C Clamp allows it to glide with ease on the aluminum bar track and can be tightened or loosened quickly when finished. With a sturdy rubber lined.

SELF LOCKING SLAB TROLLEY 3 WHEELS

Codes
AUSLTM3

- This heavy-duty trolley with its solid wheel & self locking jaws is an all terrain trolley
- Ideal for moving heavy work pieces from truck to work areas on building sites
- The dolly has 350 x 100mm diameter pressurized wheels and a 125mm heavy duty swivel caster that increases stability & flexibility in narrow & rough surfaces

SLAB CART 800

Codes
3ASC800W

- Easily and safely transports heavy slab
- Reduces strain and risk of injury
- Clamps onto stone to cross any terrain
- 8" non-marking, flat-free, shock absorbing tires
- W.L.L 340kg

FABRICATION STAND (PAIR)

Codes
3AFS3139W

- Portable
- Compact
- Durable
- Flexible
- Lightweight
- The Abaco Fabrication stand is designed to support slabs for polishing, sharpening, cutting and many other purposes. The height is adjustable from 800mm to 1000mm

SLAB DOLLY 4 WHEELS

Codes
3ASDS003W

- It is joined by 2 solid rubber wheels, 2 swivel wheels and a channel. The rubber is vulcanized to the bottom, sides and top of the trolley to avoid any chipping edges on the finished work piece.
- Dimensions: 510 x 250 x 108mm
- Solid rubber wheels: 205 x 56mm
- Swivel wheels: 77 x 30mm
- Loading capacity: 300kg
- Net Weight: 12kg

SLAB DOLLY - 2 PNEUMATIC WHEELS

Type	Codes
8" Slab Dolly	3ASD008
11" Slab Dolly	3ASD011

- The 11" pneumatic wheeled slab dolly is used to move slabs around the work place and one-site. Joined by two pneumatic wheels and a channel. The channel is rubber vulcanized alone all sides to avoid any chipping edges on the finished work piece.
- Pneumatic wheels: 270 x 80mm
- U Channel: 100 x 50mm
- Loading capacity: 275kg
- Net Weight: 10kg
- Length: 510mm
- Width: 300mm / Height: 280mm

SLAB CART 500

Codes
3ASC500W

- Easily and safely transports heavy stone
- Reduces strain and risk of injury
- Low profile provides more height clearance
- Clamps to stone during transport and for lifting over curbs and stairs
- Extremely stable and easy to maneuver
- W.L.L 340kg

SELF LOCKING SLAB TROLLEY WITH KICK STAND

Codes
AUSLT13M3-W

- This heavy-duty trolley with its solid wheel & self locking jaws is an all terrain trolley
- Ideal for moving heavy work pieces from truck to work areas on building sites
- The dolly has 350 x 100mm diameter pressurized wheels and a 125mm heavy duty swivel caster that increases stability & flexibility in narrow & rough surfaces

EZ-PRO WINCH CART

Description
AUEWC450

- Provides a much safer and economical method for loading and unloading the large slab out of truck, lowering the piece to the ground, raising the slab for installation. It is very common in warehouses, workshops and construction sites.
- Come with a slide body where the slab can be raised or lowered by the use of an electric winch.
- Construct with a slab securing sliding block to hold the slab tightly from the top down and a plastic clamp kit to secure it from the bottom up enhances safety level as well as added stability during transportation.
- Rubber pads covered on the main base are designed to prevent scratches or damages to the slab being carried during operation.
- With the effective and practical design, the cart could easily transport the slab weighing up 990 lbs (450 kg).
- The winch cart has equipped with a wireless remote for ensuring operator's safety.
- Length: 880mm
- Width: 432mm
- Height: 1704- 2574mm
- Net Weight: 51kg
- Work load limit 450kg

ELEVATING HAND CART

Description
AUEHC3541

- The Elevating Hand Cart is designed for raising, loading, and unloading finished pieces safely with minimal labor. It is constructed with a vertical steel channel where pieces can be raised and lowered by the use of a hand crank.
- Two pneumatic tires and two self-locking swivel casters are positioned just outside the steel frame of the base for added stability. The Elevating Hand Cart has the ability to elevate pieces from 1 foot up to 3 1/2 feet where they can be easily loaded onto a truck bed for transport to and from the job sites.
- The hand crank of Elevating Hand Cart is located on the controlling unit away from the pieces being handled for safety purposes. A rubber lined channel can accommodate the pieces up to 2 3/4" (70 mm).
- Length: 977mm
- Width: 656mm
- height: 1800 - 2500mm
- Net weight: 87kg
- W.L.L: 500kg

8” HAND-PUMP SUCTION LIFTER BRASS HANDLE WOODS USA

Codes
CR-W4950

- Lifting Capacity - 120kg
- 200mm single vacuum cup
- Brass pump and full metal handle

8” HAND-PUMP SUCTION LIFTER NYLON HANDLE

Codes
CR-S338

- Lifting Capacity - 56kg
- 200mm single vacuum cup
- Nylon Handle

SINK LOCK (SINGLE/ DOUBLE)

Size	Codes
Single Sink	ABSL24
Double Sink	ABSL48

- Light and compact
- User friendly
- Efficient
- A must have tool for the positioning and gluing of sinks to counter tops. With the sink lock you will not have any difficulties in adjusting the location of the sink into perfect positioning
- Securely supports your sink while the glue is drying. The sink lock has a quick release lock nut, which allows you to lock the sink into place very quickly

SINKHOLE SAVERS

Size	Codes
1.2M	FUJSHS4
1.8M	FUJSHS6
2.4M	FUJSHS8

- Designed to strengthen bench tops with cut outs
- For Hassle free lifting & transportation
- Sold individually (Best used in pairs)

SEAM SETTER DOUBLE RAIL

Codes

LYNSSDR

Description:
With the Seam Setter your counter tops will be perfectly joint and level.
With a large foot print 7 1/2" suction cups our Seam Setter is very strong for the required task.

- Light and Compact
- Simple and Easy to use
- Very Efficient
- Carry case included

SEAMING TOOL (LEVER TYPE PADS)

Codes

LYN0702A

- Ø117mm Leaver type suction pads
- The ideal tool for pulling together flat, smooth sheets of material exactly to the millimeter.
- Suitable for all materials with plane like glass, plastic, metal, coated wood, marble etc.
- The vacuum is produced by lever action.

WATERFALL SEAMING TOOL - PAIR

Codes

LYN9602S

- Ø117mm Leaver type suction pads
- The ideal tool for pulling together flat, smooth sheets of material exactly to the millimeter.
- Suitable for all materials with plane like glass, plastic, metal, coated wood, marble etc.
- The vacuum is produced by lever action.

DOUBLE CUP SUCTION GRIPPER - LIFTER

Codes

LYNDSCUP

- 2 x 117mm vacuum cups
- Handheld lifter
- Lifting capacity - 35kg

LEVELLERS

Codes

LYNST

Description:
Abaco levellers are designed to level the surface of your countertops. When combined with the Abaco Ratchet Seam Setter they become the must have tools for any installer

- Efficient
- Accurate
- Light weight
- Quick & Easy to use

ADJUSTABLE ANGLE SUCTION LIFTER

Codes

LYN9602G

- 2 x 117mm vacuum cups
- 2 guiding units with one adjusting screw
- Angle range of 45° - 300°

Portable Saws
Heavy Machinery

SITE SAW - ALUMINIUM

Model Number	ITC800AL	ITC1000AL	ITC1200AL	ITC1500AL	ITC1500ALT
Blade/Hole (mm)	250-300-350	250-300-350	250-300-350	250-300-350	300-350-4000
Depth of cut (mm)	110	110	110	110	130
Length of cut (mm)	850	1000	1200	1500	1500
Voltage- Hertz	230V- 50/60HZ	230V- 50/60HZ	230V- 50/60HZ	230V- 50/60HZ	400V- 50/60HZ
Power (KW)	2.2	2.2	2.2	2.2	3
Speed (RPM)	2800	2800	2800	2800	2800
Dimensions (WxDxH - cm)	135x68x78	145x68x78	165x68x78	192x68x78	192x68x78
Weight (kg)	75	80	85	90	95

- The stone bench saws ITC AL are ideal for the construction sector and for everyone who needs to move their machinery often. Professional wet saw, very light and resistant to corrosive processes, thanks to their structure in aluminium.
- Solid, precise and versatile they are adaptable to cutting all materials (Grès porcelain stone-wares, bricks, items in concrete, brickworks, natural stones, marbles and granites).
- The head runs on chrome-plated guides by means of linear recirculating ball bearings with anti-dust protection.
- Manual inclination of the bridge for cuts from 90° to 45°. Adjustment of the depth of the cut is with a flywheel set above the motor unit. They are designed to work with blades of Ø250 Ø300 Ø350 Ø400 mm. Available in single-phase or three-phase version.
- Manual inclination of the bridge for cuts from 90° to 45°. Adjustment of the depth of the cut is with a flywheel set above the motor unit. They are designed to work with blades of Ø250 Ø300 Ø350 Ø400 mm. Available in single-phase or three-phase version.

FLOOR GRINDING/ POLISHING MACHINE - FOLGORE

Model Number	FOLGORE280	FOLGORE300	FOLGORE330	FOLGORE300 PLUS	FOLGORE330 PLUS
Voltage- Hertz	230V-50/60HZ	230V-50/60HZ	400V-50/60HZ	400V-50/60HZ	400V-50/60HZ
Power (KW)	2.2	3	4	4	4
Disk (Ø mm)	280	300	330	300	330
Water tank (L)	25	25	25	40	40
Dimensions (WxDxH - cm)	98x52x78	98x52x78	98x52x78	122x65x80	122x65x80
Tools speed (RPM)	400	400	400	400	400
Weight (kg)	98	102	105	140	140

- Traditional floor grinding/polishing machines, ideal for work in flats or on medium-large surfaces. Tough machines, compact and reliable. Specific for marble, Terrazzo, soft stone, concrete and similar.
- Employing special diamond abrasives and resinoids, they are also excellent for working granite and semiprecious stones. A flywheel between the tank and the motor permits levelling of the machine during the work process. Emission of water is regulated by a small valve positioned on the tank cap.
- Equipped with a rounded handle for guiding the machine while working. Available with single or three-phase motor. Machines of the PLUS series, thanks to their size, exploit a greater range of action.

ABACO - DEHYDRATOR

Item Code	Description	Items Included
ABDES ABDESS	The Abaco Dehydrator is a dehydration system for the fast collection and trapping of the abrasive mud produced by machining and finishing marble, granite and other stones. The Abaco dehydrator is an economical, one step method in seperating and dewatering sludge's and slurries. The dehydrator is constructed of stainless steel and consists of four basic components: pump, mud holding tank, clean water tray and filter bags. The Abaco dehydrator has no moving parts, requires minimal labour, is very economical to use. And since it is constructed out of stainless steel, requires extremely low maintenance.	• 4x Plastic Curtains • 2x Stainless Steel Curtain Rods • 1 x 5m length Industry Water Hose • 3 x Industry Hose Clamps • 20 x Polypropylene Bags • 1 x Pit Cleaning Tool / Air Stick • 1 x Solid Rubber Drain Plug

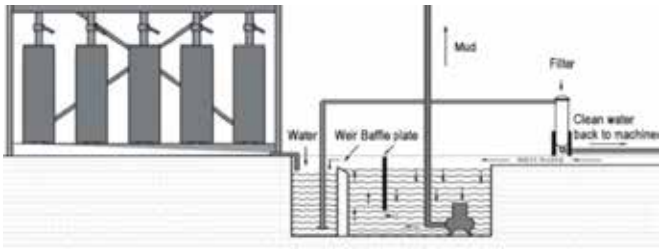

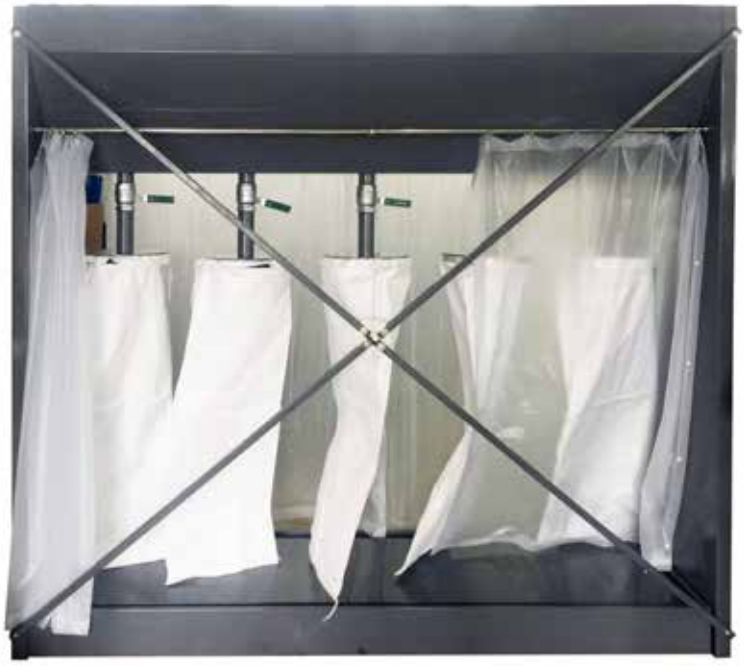

Dimension (mm)	2270 x 2220 x 600
Weight (kg)	280
Power	230v 60 Hz / 240v 50 Hz
Weekly Output Capacity of Dry Mud	22 cu. Feet
Mud Holding Tank Capacity	550lts
Sump Pump	6E-CIA-SFS 189lpm
Float Switch	Piggy back mechanical float switch
Bag Dimension	350 dia. x1200
Construction Material	Stainless steel or Zinc Sealed Marine Coater Steel
Flange for Bag	350 dia. Aluminm
Fasteners	Stainless steel
Valves	2 inch BSP Brass Nickle Plated

RADIAL ARM POLISHER/GRINDER

Description:

- The machines are pressurised through spring and equipped with hard crank plate type mechanism, easy and stable to operate, thus ensuring a long service life.
-
- Diamond Grinding to Resin/Abrasive polishing achieved by Frankfurt or Resin Plate and the degree of finish can be as high as 100%.
- Machine available in Wall Mount or Pillar Type.

MORTAR MIXER

Description:

- Designed to mix material from sand to cement into a homogeneous mixture within 30 - 60 seconds
- Detachable for easy transporting and clearance
- Steel frame and drum with a single phase motor
- 105L

Length (mm)	950
Width (mm)	280
Height (mm)	1150
Net Weight (mm)	115
Horse Power	2 HP
Voltage	240V/ 110V
Cycles	50 Hz/ 60Hz
Phase	1

FOUR PAD VACUUM LIFTER CONDOR

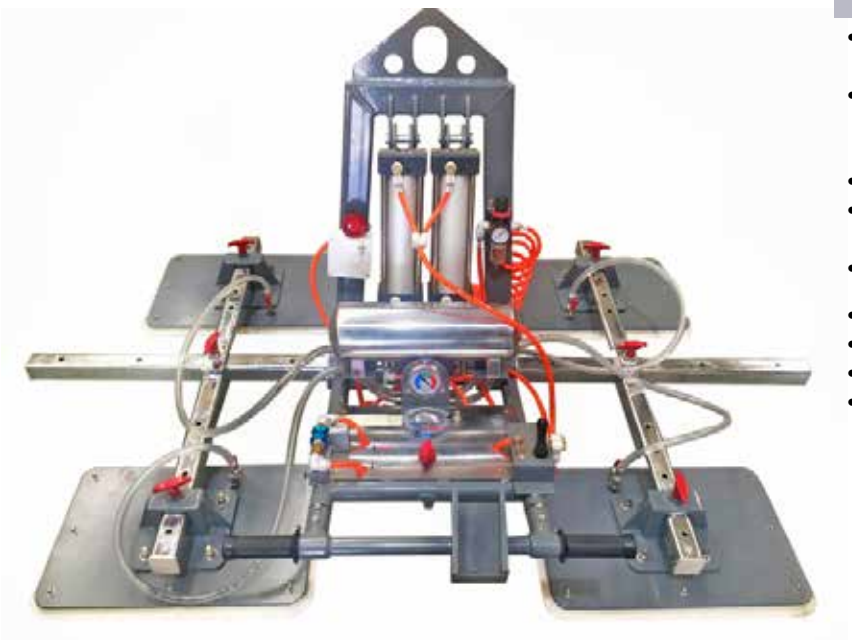

Description:

- Designed for lifting and installing large sized slabs
- Useful to work in the warehouse, workshops or factories and especially suitable for horizontal transportation
- Can incline vertical position from 0 -90 Degrees
- Handles can be used to lift and move, while the same vacuum is used to hold and lift the load
- Designed to lift smooth surfaced stone

- Lifting power: 1000Kg
- Weight: 120 Kg
- Minimum slab dimension: 1320 x 720 mm
- Maintaining pressure of pre-vacuum tankBar (kg/cm2): 0.7 - 0.8

THREE PAD VACUUM LIFTER ALBATROSS

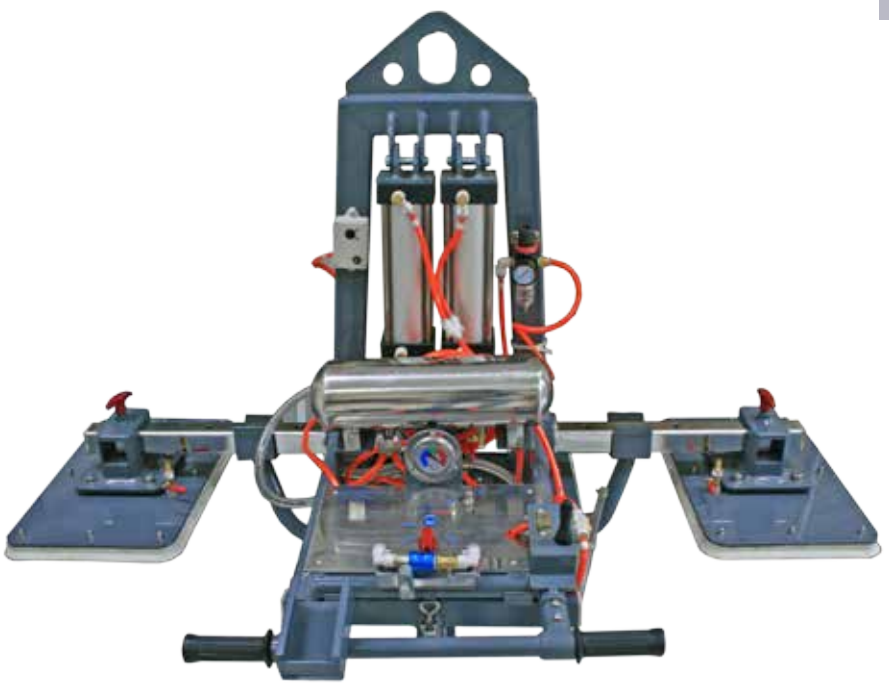

Description:

- Designed for lifting, moving and installing large size slabs.
- It is useful to work in the warehouse, workshops or factories and especially suitable for horizontal transportation.
- Tilt flat or upright positions 0-90 Degrees. Use the handle to lift and move, while the same vacuum is used to hold and lift the load properly.
- One person operation to save labor cost, increase productivity and efficiency.
- Designed to lift smooth surfaced stone.
- Cart included for easy maneuver.

- Lifting power: 750 kgs
- Weight: 120 Kg
- Minimum slab dimension: 1320 x 620 mm
- Maintaining pressure of pre-vacuum tankBar (kg/cm2): 0.7 - 0.8

CNC BRIDGE SAW ORBIT A5

Description:

- This bridge saw has everything a technologically advanced bridge saw needs to have today: 5 interpolated axis, spindle with half inch fitting with trough-spindle lubrication, tilting table up to 85°, vacuum manipulator system for parts movement during automatic cut process, on-board camera, blade presetting and stone thickness probe.
- This machine is a fully interpolated 5 axis bridge saw.
- The Y axis is moved by a gantry system. This guarantees a perfect square of the bridge. Automatic head rotation from 0° to 400° combined with automatic blade tilting from 0° to 90°
- Suitable for large production runs, at the same time containing costs.
- This machine comes with the "absolutely zero" technology, which allow the machine to work without doing the homing process.
- It has an extremely easy to use interface, realized to facilitate the interaction between the operator and the machine.
- It can quickly do easy cuts in manual, the machine also can import and work with DXF (AutoCAD) files and "G-code" (RS-274 machine tool programming language)
- The cable-drag chain and the electric cables used on the machine are purposely made for use at high speed (robot materials).

CNC BRIDGE SAW ORBIT B5

Description:

- This bridge saw has everything a technologically advanced bridge saw needs to have today: spindle with half inch fitting with trough-spindle lubrication, on-board camera, blade presetting and stone thickness probe.
- This machine is a fully interpolated 5 axis bridge saw. Head rotate 0° to 400° interpolate with blade tilting 0° to 90° makes it suitable for any jobs . This machine can runs large production , at the same time containing costs.
- The absolute precision of the movements is guaranteed by a state of art transmission on linear ball guide, moved by brushless motors through high precision helical gears and racks.
- This machine comes with the "absolutely zero" technology, which allows the machine to work without doing the homing process.
- It has an extremely easy to use interface, designed to facilitate easy interaction between operator and machine.
- The ORBIT B5 imports and works with DXF (standard CAD file) f and standard G-Code (Standard RS-274 machine tool programming language), but can also do simple cuts in manual mode.
- The structure is hot-galvanized and painted to last a long life.

CNC SAWJET ORBIT A5

Description:

- This stone CNC Sawjet & bridge saw has everything a technologically advanced bridge saw & waterjet needs to have today: 5 interpolated axis, spindle with half inch fitting with trough-spindle lubrication, tilting table up to 85°(Optional), vacuum manipulator system for parts movement during automatic cut process, on-board camera, blade presetting and stone thickness probe.
- Waterjet 5 axis.
- This machine is a fully interpolated 5 axis bridge saw. The Y axis is moved by a gantry system. This guarantees a perfect square of the bridge. Automatic head rotation from 0° to 400° combined with automatic blade tilting from 0° to 90° makes it suitable for large production runs, at the same time containing costs.
- The absolute precision of the movements is guarantee by a state of art transmission on linear ball guide, moved by brushless motors through high precision helical gears and racks.
- CNC Sawjet & bridge saw machine comes with the "absolutely zero" technology, which allow the machine to work without doing the homing process.
- It has an extremely easy to use interface, realized to facilitate the interaction between the operator and the machine.
- CNC Sawjet & bridge saw can quickly do easy cuts in manual, the machine also can import and work with DXF (AutoCAD) files and "G-code" (RS-274 machine tool programming language).
- The cable-drag chain and the electric cables used on the machine are purposely made for use at high speed (robot materials).

MST MITER SAW

Description:

- Heavy duty miter saw. The rigid structure eliminates vibrations and gives a sharp edge on your miters.
- Retractable alignment provides for easy loading. Pneumatic cylinders firmly hold the stone in place on the machine table and can be adjusted for narrow strips, ensuring a straight mitre every time.
- Available with optional 3 motors to mount polishing pads for polish flat edges.

EDGE POLISHER ROBOT EPR 3500

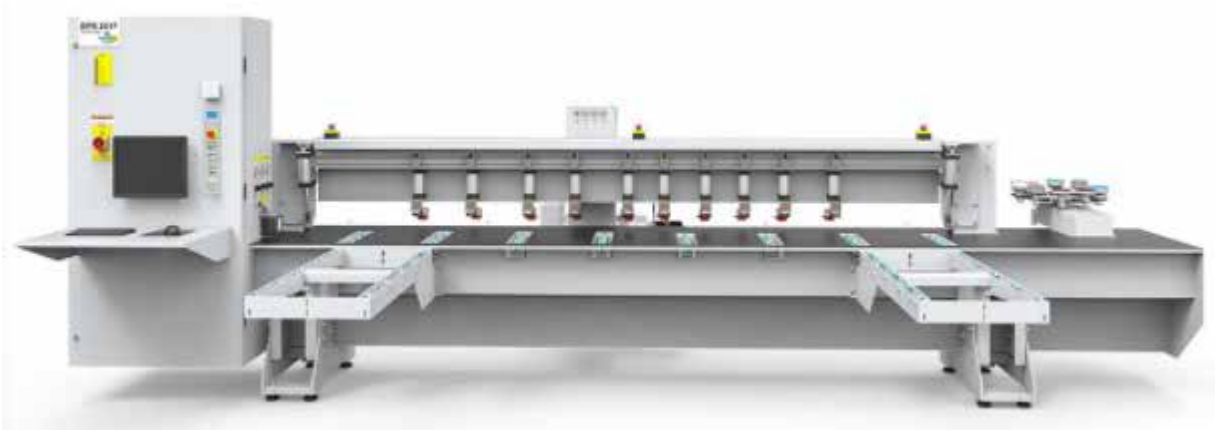

Description:

- This machine can carry out all the operations needed for the shaping and polishing of flat and rounded edges.
- The EPR 3500 is a fine combination of mechanical, electrical and software engeneering.
- It can shape and polish convex edges on the stone using flat polishing tools, the machine has the fastet patented automatic tool change in the market.
- It has a patented motor that can retract and extend his shaft pneumatically, and uses different pressures to adjust the work load of tools on the stone.

KITCHEN TOP CNC KT32

Description:

- The machines are pressurised through spring and equipped with hard crank plate type mechanism, easy and stable to operate, thus ensuring a long service life.
-
- Diamond Grinding to Resin/Abrasive polishing achieved by Frankfurt or Resin Plate and the degree of finish can be as high as 100%.
- Machine available in Wall Mount or Pillar Type.

KITCHEN TOP CNC KT38

Description:

- The machines are pressurised through spring and equipped with hard crank plate type mechanism, easy and stable to operate, thus ensuring a long service life.
-
- Diamond Grinding to Resin/Abrasive polishing achieved by Frankfurt or Resin Plate and the degree of finish can be as high as 100%.
- Machine available in Wall Mount or Pillar Type.

KITCHEN TOP CNC KT48

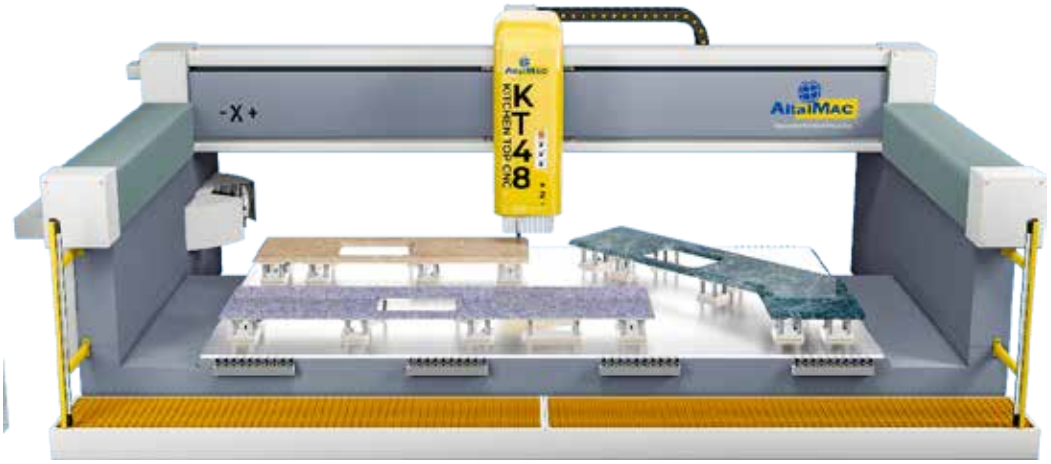

Description:

- The machines are pressurised through spring and equipped with hard crank plate type mechanism, easy and stable to operate, thus ensuring a long service life.
- Diamond Grinding to Resin/Abrasive polishing achieved by Frankfurt or Resin Plate and the degree of finish can be as high as 100%.
- Machine available in Wall Mount or Pillar Type.

KITCHEN TOP CNC KT16

Description:

- The machines are pressurised through spring and equipped with hard crank plate type mechanism, easy and stable to operate, thus ensuring a long service life
- Diamond Grinding to Resin/Abrasive polishing achieved by Frankfurt or Resin Plate and the degree of finish can be as high as 100%.
- Machine available in Wall Mount or Pillar Type.

STONE SINK CNC KT12

Description:

- Stone sink CNC KT12 is cutting machine for granite marble and quartz.it is a excellent stone Kitchen Top CNC.
- The Stone sink CNC KT12 is a revolutionary machine to cut granite countertops, modern and simple to use thanks to AitalMAC experience in making CNC machines for granite for more than 30 years, the KT12 it's the best CNC machine on the market to cut sink cut out.
- The open design makes it easy to load and unload your countertops on the machine (optional 2 tables to double production), parts can be quickly lined up on alignment blocks, and immediately fixed with pneumatic locking pistons.
- The user-friendly UI lets you choose between your loaded sink cut outs, after finding the center with the laser pointer, all the operator has to do it start and watch it cut.

SPECIFICATIONS AND PARAMETERS

Specifications for Italdiamant Diamond Blades

Slab thickness	Diameter	RPM	Speed
8 - 12 - 20 mm	Ø 300 mm	2100 - 2800	1 meter/min
8 - 12 - 20 mm	Ø 350 mm	19000 - 2500	1 meter/min
8 - 12 - 20 mm	Ø 400 mm	1700 - 2300	1 meter/min
8 - 12 - 20 mm	Ø 450 mm	1400 - 2000	1 meter/min
8 - 12 - 20 mm	Ø 500 mm	1200 - 1600	1 meter/min

Specifications for Italdiamant Vacuum Brazed Core Drill Bits

Slab thickness	Diameter	RPM	Cutting rate/feed	Average life
10 - 20 - 30 mm	Ø 15 mm	3500 - 4000	20 mm/min	80 - 100 Holes
10 - 20 - 30 mm	Ø 20-22-26 mm	3500 - 4000	20 mm/min	80 - 100 Holes
10 - 20 - 30 mm	Ø 25 mm	3500 - 4000	30 mm/min	80 - 100 Holes
10 - 20 - 30 mm	Ø 30-35 mm	2500 - 3500	30 mm/min	80 - 100 Holes
10 - 20 - 30 mm	Ø 68-70-75-105 mm	1000 - 2000	30 mm/min	80 - 100 Holes

Parameters for High Speed Diamond Wheels

Pos.	OD Ø (mm)	R.P.M	Feed (mm/min)	Removal (mm)
1	Ø 20	6000	600 to 900	0,4
2	Ø 20	6500	600 to 1100	0,25
3	Ø 20	6500	600 to 1100	0,2
4	Ø 20	6000	600 to 1000	0,05 to 0,1

Parameters for Flash (express) Polishing Wheels

Pos.	OD Ø (mm)	R.P.M	Feed (mm/min)	Removal (mm)
Blue	Ø 20	2700	1000-1500	0,05
White	Ø 20	2700	1000-1500	0,05

TENAX

POWERBOND

STRONG AND ULTRA RAPID GLUE

High Adhesion system for indoor and outdoor bonding and coupling of ceramic. The speed and the adhesion strength in a cartridge available in a wide range of colors.

- **SUGGESTED FOR CERAMIC**
- **EXCELLENT ADHESION**
- **ULTRA RAPID**
- **EXCELLENT COLOR STABILITY TO SUNLIGHT**
- **ZERO VOC**
- **GLOSSY, SHINY AND EASY TO POLISH**

Product	Ratio mix	Format	Colour	Outdoor	Indoor	Gel time 25°C	Working time 25°C	Yellowing to Sunlight
Powerbond	2+1	215ml	Coloured	Yes	Yes	3-5 min	45-60 min	Zero

Twin Gun Dispenser also available for Purchase
Call for more information

INDOOR OUTDOOR

POWERBOND COLOUR CHART

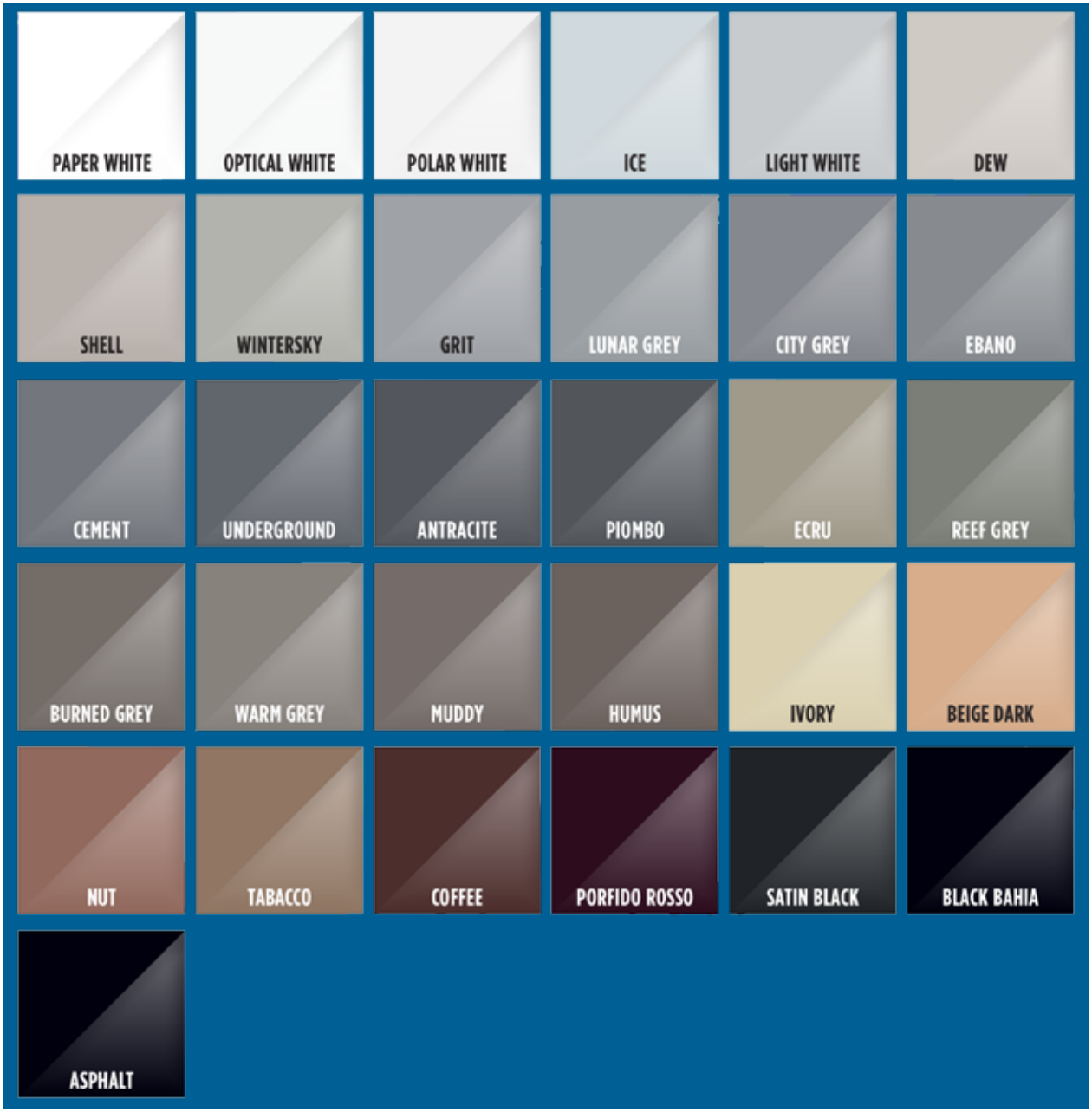

TECHNICAL DATA

Viscosity cps 25°C 20 r.p.m (ASTM D2196)	Tixotropic liquid
Density at 25°C gr/cm^3	1.27
Aspect	coloured liquid
Ratio of use glue/hardener	2+1
Gel time (in bulk) at 25°C in min	3-5 min
Time for handling pieces	Aprox 15 min
Working time suggested at 25°C	Aprox 45-6 min
Minimum reaction temperature	+1°C
Minimum temperature of use after hardening	-25°C
Maximum temperature of use after hardening	+60°C
Shelf life at 18-20°C	12 months

CMP Stonemason Supplies Pty Ltd

CREDIT ACCOUNT APPLICATION

To Be Completed By Applicants - Please complete all sections and read the Terms and Conditions of Trade overleaf or attached.

Type of Business:	**Sole Trader** ☐	**Trust** ☐	**Partnership** ☐ **Company** ☐
Company Name:		ABN No:	
Trading Name:		ACN No:	
Physical Address:		State:	Postcode:
Billing Address:		State:	Postcode:
Email Address:		Phone No:	
Alternative Email Address:		Fax No:	
Directors / Owners / Trustee (if more than two, please attach a separate sheet)			
Full Name:		D.O.B.	
Private Address:		State:	Postcode:
Driver's Licence No:	Phone No:	Mobile No:	
Full Name:		D.O.B.	
Private Address:		State:	Postcode:
Driver's Licence No:	Phone No:	Mobile No:	
Date Business / Company Established: (Current Owners)		Credit Limit Required: $	
Nature of Business:	Paid Up Capital:	Estimated Monthly Purchases: $	
Principal Place of Business is: ☐Rented ☐Owned ☐ Mortgaged (*to whom*)			
Purchase Order Required: ☐ YES ☐ NO		**Accounts to be emailed**? ☐ YES ☐ NO	
Accounts Email Address:			
Accounts Contact:	Phone No:	Mobile No:	
Bank and Branch:		Account No:	
Account Terms: 30 Day ☐	COD ☐	Other:	

Trade References: (Please provide companies that are willing to do trade references)

Name	Address	Phone / Fax / Email:
1.		
2.		
3.		

I certify that the above information is true and correct and that I am authorised to make this application for credit. I have read and understand the TERMS AND CONDITIONS OF TRADE (overleaf or attached) of CMP Stonemason Supplies Pty Ltd which form part of, and are intended to be read in conjunction with this Credit Account Application and agree to be bound by these conditions. I authorise the use of my personal information as detailed in the Privacy Act clause therein. ***I agree that if I am a director/shareholder (owning at least 15% of the shares) of the Customer I shall be personally liable for the performance of the Customer's obligations under this contract.***

SIGNED (CUSTOMER): _____ **SIGNED (SELLER):** _____

Name: _____ Name: _____

Position: _____ Position: _____

WITNESS TO CUSTOMER'S SIGNATURE:

Signed: _____ Name: _____ Date: _____

OFFICE USE ONLY				
ACC / Ref No	CREDIT LIMIT	APPROVED BY	DATA INPUTTED	DATE
	$			/ /

CMP Stonemason Supplies Pty Ltd - ABN 11 079 199 223
PO Box 1, Hampton Park VIC 3776 - Ph (03) 8786 3113 - Fax (03) 8786 3115
Email admin@cmpstone.com.au - Web www.cmpstone.com.au

©Copyright - EC Credit Control 1999 - 2015

CMP Stonemason Supplies Pty Ltd – Terms & Conditions of Trade

1. Definitions

1.1 "Seller" means CMP Stonemason Supplies Pty Ltd, its successors and assigns or any person acting on behalf of and with the authority of CMP Stonemason Supplies Pty Ltd.

1.2 "Customer" means the person/s buying the Goods as specified in any invoice, document or order, and if there is more than one Customer is a reference to each Customer jointly and severally.

1.3 "Goods" means all Goods or Services supplied by the Seller to the Customer at the Customer's request from time to time (where the context so permits the terms 'Goods' or 'Services' shall be interchangeable for the other).

1.4 "Price" means the Price payable for the Goods as agreed between the Seller and the Customer in accordance with clause 5 below.

2. Acceptance

2.1 The Customer is taken to have exclusively accepted and is immediately bound, jointly and severally, by these terms and conditions if the Customer places an order for or accepts delivery of the Goods.

2.2 These terms and conditions may only be amended with the Seller's consent in writing and shall prevail to the extent of any inconsistency with any other document or agreement between the Customer and the Seller.

3. Electronic Transactions (Victoria) Act 2000

3.1 Electronic signatures shall be deemed to be accepted by either party providing that the parties have complied with Section 9 of the Electronic Transactions (Victoria) Act 2000 or any other applicable provisions of that Act or any Regulations referred to in that Act.

4. Change in Control

4.1 The Customer shall give the Seller not less than fourteen (14) days prior written notice of any proposed change of ownership of the Customer and/or any other change in the Customer's details (including but not limited to, changes in the Customer's name, address, contact phone or fax number/s, or business practice). The Customer shall be liable for any loss incurred by the Seller as a result of the Customer's failure to comply with this clause.

5. Price and Payment

5.1 At the Seller's sole discretion the Price shall be either:
(a) as indicated on any invoice provided by the Seller to the Customer; or
(b) the Price as at the date of delivery of the Goods according to the Seller's current price list; or
(c) the Seller's quoted price (subject to clause 5.2) which will be valid for the period stated in the quotation or otherwise for a period of thirty (30) days.

5.2 The Seller reserves the right to change the Price if a variation to the Seller's quotation is requested. Any variation from the plan of scheduled Services or specifications of the Goods (including, but not limited to, any variation as a result of fluctuations in currency exchange rates or increases to the Seller in the cost of taxes, levies, materials and labour) will be charged for on the basis of the Seller's quotation and will be shown as variations on the invoice.

5.3 At the Seller's sole discretion a non-refundable deposit may be required.

5.4 Time for payment for the Goods being of the essence, the Price will be payable by the Customer on the date/s determined by the Seller, which may be:
(a) on delivery of the Goods;
(b) before delivery of the Goods;
(c) by way of instalments/progress payments in accordance with the Seller's payment schedule;
(d) thirty (30) days following the end of the month in which a statement is posted to the Customer's address or address for notices;
(e) the date specified on any invoice or other form as being the date for payment; or
(f) failing any notice to the contrary, the date which is seven (7) days following the date of any invoice given to the Customer by the Seller.

5.5 Payment may be made by cash, cheque, bank cheque, electronic/on-line banking, credit card (plus a surcharge of up to two percent (2%) of the Price), or by any other method as agreed to between the Customer and the Seller.

5.6 Unless otherwise stated the Price does not include GST. In addition to the Price the Customer must pay to the Seller an amount equal to any GST the Seller must pay for any supply by the Seller under this or any other agreement for the sale of the Goods. The Customer must pay GST, without deduction or set off of any other amounts, at the same time and on the same basis as the Customer pays the Price. In addition the Customer must pay any other taxes and duties that may be applicable in addition to the Price except where they are expressly included in the Price.

6. Delivery of Goods

6.1 Delivery ("**Delivery**") of the Goods is taken to occur at the time that:
(a) the Customer or the Customer's nominated carrier takes possession of the Goods at the Seller's address; or
(b) the Seller (or the Seller's nominated carrier) delivers the Goods to the Customer's nominated address even if the Customer is not present at the address.

6.2 At the Seller's sole discretion the cost of delivery is either included in the Price or is in addition to the Price.

6.3 The Customer must take delivery by receipt or collection of the Goods whenever they are tendered for delivery. In the event that the Customer is unable to take delivery of the Goods as arranged then the Seller shall be entitled to charge a reasonable fee for redelivery and/or storage.

6.4 Any time or date given by the Seller to the Customer is an estimate only. The Customer must still accept delivery of the Goods even if late and the Seller will not be liable for any loss or damage incurred by the Customer as a result of the delivery being late.

7. Risk

7.1 Risk of damage to or loss of the Goods passes to the Customer on Delivery and the Customer must insure the Goods on or before Delivery.

7.2 If any of the Goods are damaged or destroyed following delivery but prior to ownership passing to the Customer, the Seller is entitled to receive all insurance proceeds payable for the Goods. The production of these terms and conditions by the Seller is sufficient evidence of the Seller's rights to receive the insurance proceeds without the need for any person dealing with the Seller to make further enquiries.

7.3 If the Customer requests the Seller to leave Goods outside the Seller's premises for collection or to deliver the Goods to an unattended location then such Goods shall be left at the Customer's sole risk.

7.4 The Customer acknowledges that variations of colour, shade and grain are inherent in all kiln fired products and natural stone. While every effort will be taken by the Seller to match colour, shade or grain of product, the Seller shall not be liable for any loss, damages or costs howsoever arising resulting from any variation in colour, shading or grain between batches of product or sale samples and the final product supplied.

7.5 The Customer acknowledges and accepts that the supply of Goods for accepted orders may be subject to availability and if, for any reason, Goods are not or cease to be available, the Seller reserves the right to vary the Price with alternative Goods as per clause 5.2. The Seller also reserves the right to halt all Services until such time as the Seller and the Customer agree to such changes.

7.6 Any advice, recommendation, information, assistance or service provided by the Seller in relation to Goods or Services supplied is given in good faith, is based on the Seller's own knowledge and experience and shall be accepted without liability on the part of the Seller and it shall be the responsibility of the Customer to confirm the accuracy and reliability of the same in light of the use to which the Customer makes or intends to make of the Goods or Services.

8. Accuracy of Customer's Plans and Measurements

8.1 The Seller shall be entitled to rely on the accuracy of any plans, specifications and other information provided by the Customer. The Customer acknowledges and agrees that in the event that any of this information provided by the Customer is inaccurate, the Seller accepts no responsibility for any loss, damages, or costs however resulting from these inaccurate plans, specifications or other information.

8.2 In the event the Customer gives information relating to measurements and quantities of the Goods required to complete the Services, it is the Customer's responsibility to verify the accuracy of the measurements and quantities, before the Customer or Seller places an order based on these measurements and quantities. The Seller accepts no responsibility for any loss, damages, or costs however resulting from the Customer's failure to comply with this clause.

9. Title

9.1 The Seller and the Customer agree that ownership of the Goods shall not pass until:
(a) the Customer has paid the Seller all amounts owing to the Seller; and
(b) the Customer has met all of its other obligations to the Seller.

9.2 Receipt by the Seller of any form of payment other than cash shall not be deemed to be payment until that form of payment has been honoured, cleared or recognised.

9.3 It is further agreed that:
(a) until ownership of the Goods passes to the Customer in accordance with clause 9.1 that the Customer is only a bailee of the Goods and must return the Goods to the Seller on request.
(b) the Customer holds the benefit of the Customer's insurance of the Goods on trust for the Seller and must pay to the Seller the proceeds of any insurance in the event of the Goods being lost, damaged or destroyed.
(c) the Customer must not sell, dispose, or otherwise part with possession of the Goods other than in the ordinary course of business and for market value. If the Customer sells, disposes or parts with possession of the Goods then the Customer must hold the proceeds of any such act on trust for the Seller and must pay or deliver the proceeds to the Seller on demand.
(d) the Customer should not convert or process the Goods or intermix them with other goods but if the Customer does so then the Customer holds the resulting product on trust for the benefit of the Seller and must sell, dispose of or return the resulting product to the Seller as it so directs.
(e) the Customer irrevocably authorises the Seller to enter any premises where the Seller believes the Goods are kept and recover possession of the Goods.
(f) the Seller may recover possession of any Goods in transit whether or not delivery has occurred.
(g) the Customer shall not charge or grant an encumbrance over the Goods nor grant nor otherwise give away any interest in the Goods while they remain the property of the Seller.
(h) the Seller may commence proceedings to recover the Price of the Goods sold notwithstanding that ownership of the Goods has not passed to the Customer.

10. Personal Property Securities Act 2009 ("PPSA")

10.1 In this clause financing statement, financing change statement, security agreement, and security interest has the meaning given to it by the PPSA.

10.2 Upon assenting to these terms and conditions in writing the Customer acknowledges and agrees that these terms and conditions constitute a security agreement for the purposes of the PPSA and creates a security interest in all Goods and/or collateral (account) – being a monetary obligation of the Customer to the Seller for Services – that have previously been supplied and that will be supplied in the future by the Seller to the Customer.

10.3 The Customer undertakes to:
(a) promptly sign any further documents and/or provide any further information (such information to be complete, accurate and up-to-date in all respects) which the Seller may reasonably require to;
(i) register a financing statement or financing change statement in relation to a security interest on the Personal Property Securities Register;
(ii) register any other document required to be registered by the PPSA; or
(iii) correct a defect in a statement referred to in clause 10.3(a)(i) or 10.3(a)(ii);
(b) indemnify, and upon demand reimburse, the Seller for all expenses incurred in registering a financing statement or financing change statement on the Personal Property Securities Register established by the PPSA or releasing any Goods charged thereby;
(c) not register a financing change statement in respect of a security interest without the prior written consent of the Seller;
(d) not register, or permit to be registered, a financing statement or a financing change statement in relation to the Goods and/or collateral (account) in favour of a third party without the prior written consent of the Seller;
(e) immediately advise the Seller of any material change in its business practices of selling the Goods which would result in a change in the nature of proceeds derived from such sales.

10.4 The Seller and the Customer agree that sections 96, 115 and 125 of the PPSA do not apply to the security agreement created by these terms and conditions.

10.5 The Customer waives their rights to receive notices under sections 95, 118, 121(4), 130, 132(3)(d) and 132(4) of the PPSA.

10.6 The Customer waives their rights as a grantor and/or a debtor under sections 142 and 143 of the PPSA.

10.7 Unless otherwise agreed to in writing by the Seller, the Customer waives their right to receive a verification statement in accordance with section 157 of the PPSA.

10.8 The Customer must unconditionally ratify any actions taken by the Seller under clauses 10.3 to 10.5.

10.9 Subject to any express provisions to the contrary nothing in these terms and conditions is intended to have the effect of contracting out of any of the provisions of the PPSA.

11. Security and Charge

11.1 In consideration of the Seller agreeing to supply the Goods, the Customer charges all of its rights, title and interest (whether joint or several) in any land, realty or other assets capable of being charged, owned by the Customer either now or in the future, to secure the performance by the Customer of its obligations under these terms and conditions (including, but not limited to, the payment of any money).

11.2 The Customer indemnifies the Seller from and against all the Seller's costs and disbursements including legal costs on a solicitor and own client basis incurred in exercising the Seller's rights under this clause.

11.3 The Customer irrevocably appoints the Seller and each director of the Seller as the Customer's true and lawful attorney/s to perform all necessary acts to give effect to the provisions of this clause 11 including, but not limited to, signing any document on the Customer's behalf.

12. Defects, Warranties and Returns, Competition and Consumer Act 2010 (CCA)

12.1 The Customer must inspect the Goods on delivery and must within seven (7) days of delivery notify the Seller in writing of any evident defect/damage, shortage in quantity, or failure to comply with the description or quote. The Customer must notify any other alleged defect in the Goods as soon as reasonably possible after any such defect becomes evident. Upon such notification the Customer must allow the Seller to inspect the Goods.

12.2 Under applicable State, Territory and Commonwealth Law (including, without limitation the CCA), certain statutory implied guarantees and warranties (including, without limitation the statutory guarantees under the CCA) may be implied into these terms and conditions (**Non-Excluded Guarantees**).

12.3 The Seller acknowledges that nothing in these terms and conditions purports to modify or exclude the Non-Excluded Guarantees.

12.4 Except as expressly set out in these terms and conditions or in respect of the Non-Excluded Guarantees, the Seller makes no warranties or other representations under these terms and conditions including but not limited to the quality or suitability of the Goods. The Seller's liability in respect of these warranties is limited to the fullest extent permitted by law.

12.5 If the Customer is a consumer within the meaning of the CCA, the Seller's liability is limited to the extent permitted by section 64A of Schedule 2.

12.6 If the Seller is required to replace the Goods under this clause or the CCA, but is unable to do so, the Seller may refund any money the Customer has paid for the Goods.

12.7 If the Customer is not a consumer within the meaning of the CCA, the Seller's liability for any defect or damage in the Goods is:
(a) limited to the value of any express warranty or warranty card provided to the Customer by the Seller at the Seller's sole discretion;
(b) limited to any warranty to which the Seller is entitled, if the Seller did not manufacture the Goods;
(c) otherwise negated absolutely.

12.8 Subject to this clause 12, returns will only be accepted provided that:
(a) the Customer has complied with the provisions of clause 12.1; and
(b) the Seller has agreed that the Goods are defective; and
(c) the Goods are returned within a reasonable time at the Customer's cost (if that cost is not significant); and
(d) the Goods are returned in as close a condition to that in which they were delivered as is possible.

12.9 Notwithstanding clauses 12.1 to 12.8 but subject to the CCA, the Seller shall not be liable for any defect or damage which may be caused or partly caused by or arise as a result of:
(a) the Customer failing to properly maintain or store any Goods;
(b) the Customer using the Goods for any purpose other than that for which they were designed;
(c) the Customer continuing the use of any Goods after any defect became apparent or should have become apparent to a reasonably prudent operator or user;
(d) the Customer failing to follow any instructions or guidelines provided by the Seller;
(e) fair wear and tear, any accident, or act of God.

12.10 In the case of second hand Goods, unless the Customer is a consumer under the CCA, the Customer acknowledges that it has had full opportunity to inspect the second hand Goods prior to delivery and accepts them with all faults and that to the extent permitted by law no warranty is given by the Seller as to the quality or suitability for any purpose and any implied warranty, statutory or otherwise, is expressly excluded. The Customer acknowledges and agrees that the Seller has agreed to provide the Customer with the second hand Goods and calculated the Price of the second hand Goods in reliance of this clause 12.10.

12.11 Notwithstanding anything contained in this clause if the Seller is required by a law to accept a return then the Seller will only accept a return on the conditions imposed by that law.

13. Default and Consequences of Default

13.1 Interest on overdue invoices shall accrue daily from the date when payment becomes due, until the date of payment, at a rate of two and a half percent (2.5%) per calendar month (and at the Seller's sole discretion such interest shall compound monthly at such a rate) after as well as before any judgment.

13.2 If the Customer owes the Seller any money the Customer shall indemnify the Seller from and against all costs and disbursements incurred by the Seller in recovering the debt (including but not limited to internal administration fees, legal costs on a solicitor and own client basis, the Seller's contract default fee, and bank dishonour fees).

13.3 Further to any other rights or remedies the Seller may have under this contract, if a Customer has made payment to the Seller by credit card, and the transaction is subsequently reversed, the Customer shall be liable for the amount of the reversed transaction, in addition to any further costs incurred by the Seller under this clause 13 where it can be proven that such reversal is found to be illegal, fraudulent or in contravention to the Customer's obligations under this agreement.

13.4 Without prejudice to any other remedies the Seller may have, if at any time the Customer is in breach of any obligation (including those relating to payment) under these terms and conditions the Seller may suspend or terminate the supply of Goods to the Customer. The Seller will not be liable to the Customer for any loss or damage the Customer suffers because the Seller has exercised its rights under this clause.

13.5 Without prejudice to the Seller's other remedies at law the Seller shall be entitled to cancel all or any part of any order of the Customer which remains unfulfilled and all amounts owing to the Seller shall, whether or not due for payment, become immediately payable if:
(a) any money payable to the Seller becomes overdue, or in the Seller's opinion the Customer will be unable to make a payment when it falls due;
(b) the Customer becomes insolvent, convenes a meeting with its creditors or proposes or enters into an arrangement with creditors, or makes an assignment for the benefit of its creditors; or
(c) a receiver, manager, liquidator (provisional or otherwise) or similar person is appointed in respect of the Customer or any asset of the Customer.

14. Cancellation

14.1 The Seller may cancel any contract to which these terms and conditions apply or cancel delivery of Goods at any time before the Goods are delivered by giving written notice to the Customer. On giving such notice the Seller shall repay to the Customer any money paid by the Customer for the Goods. The Seller shall not be liable for any loss or damage whatsoever arising from such cancellation.

14.2 In the event that the Customer cancels delivery of Goods the Customer shall be liable for any and all loss incurred (whether direct or indirect) by the Seller as a direct result of the cancellation (including, but not limited to, any loss of profits).

14.3 Cancellation of orders for Goods made to the Customer's specifications, or for non-stocklist items, will definitely not be accepted once production has commenced, or an order has been placed.

15. Dispute Resolution

15.1 If a dispute arises between the parties to this contract then either party shall send to the other party a notice of dispute in writing adequately identifying and providing details of the dispute. Within fourteen (14) days after service of a notice of dispute, the parties shall confer at least once, to attempt to resolve the dispute. At any such conference each party shall be represented by a person having authority to agree to a resolution of the dispute. In the event that the dispute cannot be so resolved either party may by further notice in writing delivered by hand or sent by certified mail to the other party refer such dispute to arbitration. Any arbitration shall be:
(a) referred to a single arbitrator to be nominated by the President of the Institute of Arbitrators Australia; and
(b) conducted in accordance with the Institute of Arbitrators Australia Rules for the Conduct of Commercial Arbitration.

16. Privacy Act 1988

16.1 The Customer agrees for the Seller to obtain from a credit reporting body (CRB) a credit report containing personal credit information (e.g. name, address, D.O.B, occupation, previous credit applications, credit history) about the Customer in relation to credit provided by the Seller.

16.2 The Customer agrees that the Seller may exchange information about the Customer with those credit providers and with related body corporates for the following purposes:
(a) to assess an application by the Customer; and/or
(b) to notify other credit providers of a default by the Customer; and/or
(c) to exchange information with other credit providers as to the status of this credit account, where the Customer is in default with other credit providers; and/or
(d) to assess the creditworthiness of the Customer including the Customer's repayment history in the preceding two years.

16.3 The Customer consents to the Seller being given a consumer credit report to collect overdue payment on commercial credit.

16.4 The Customer agrees that personal credit information provided may be used and retained by the Seller for the following purposes (and for other agreed purposes or required by):
(a) the provision of Goods; and/or
(b) analysing, verifying and/or checking the Customer's credit, payment and/or status in relation to the provision of Goods; and/or
(c) processing of any payment instructions, direct debit facilities and/or credit facilities requested by the Customer; and/or
(d) enabling the collection of amounts outstanding in relation to the Goods.

16.5 The Seller may give information about the Customer to a CRB for the following purposes:
(a) to obtain a consumer credit report;
(b) allow the CRB to create or maintain a credit information file about the Customer including credit history.

16.6 The information given to the CRB may include:
(a) personal information as outlined in 16.1 above;
(b) name of the credit provider and that the Seller is a current credit provider to the Customer;
(c) whether the credit provider is a licensee;
(d) type of consumer credit;
(e) details concerning the Customer's application for credit or commercial credit (e.g. date of commencement/termination of the credit account and the amount requested);
(f) advice of consumer credit defaults, overdue accounts, loan repayments or outstanding monies which are overdue by more than sixty (60) days and for which written notice for request of payment has been made and debt recovery action commenced or alternatively that the Customer no longer has any overdue accounts and the Seller has been paid or otherwise discharged and all details surrounding that discharge(e.g. dates of payments);
(g) information that, in the opinion of the Seller, the Customer has committed a serious credit infringement;
(h) advice that the amount of the Customer's overdue payment is equal to or more than one hundred and fifty dollars ($150).

16.7 The Customer shall have the right to request (by e-mail) from the Seller:
(a) a copy of the information about the Customer retained by the Seller and the right to request that the Seller correct any incorrect information; and
(b) that the Seller does not disclose any personal information about the Customer for the purpose of direct marketing.

16.8 The Seller will destroy personal information upon the Customer's request (by e-mail) or if it is no longer required unless it is required in order to fulfil the obligations of this agreement or is required to be maintained and/or stored in accordance with the law.

16.9 The Customer can make a privacy complaint by contacting the Seller via e-mail. The Seller will respond to that complaint within seven (7) days of receipt and will take all reasonable steps to make a decision as to the complaint within thirty (30) days of receipt of the complaint. In the event that the Customer is not satisfied with the resolution provided, the Customer can make a complaint to the Information Commissioner at www.oaic.gov.au.

17. Building and Construction Industry Security of Payment Act 2002

17.1 At the Seller's sole discretion, if there are any disputes or claims for unpaid Goods and/or Services then the provisions of the Building and Construction Industry Security of Payment Act 2002 may apply.

17.2 Nothing in this agreement is intended to have the effect of contracting out of any applicable provisions of the Building and Construction Industry Security of Payment Act 2002 of Victoria, except to the extent permitted by the Act where applicable.

18. Building and Construction Industry Payments Act 2004

18.1 At the Seller's sole discretion, if there are any disputes or claims for unpaid Goods and/or Services then the provisions of the Building and Construction Industry Payments Act 2004 may apply.

18.2 Nothing in this agreement is intended to have the effect of contracting out of any applicable provisions of the Building and Construction Industry Payments Act 2004 of Queensland, except to the extent permitted by the Act where applicable.

19. General

19.1 The failure by the Seller to enforce any provision of these terms and conditions shall not be treated as a waiver of that provision, nor shall it affect the Seller's right to subsequently enforce that provision. If any provision of these terms and conditions shall be invalid, void, illegal or unenforceable the validity, existence, legality and enforceability of the remaining provisions shall not be affected, prejudiced or impaired.

19.2 These terms and conditions and any contract to which they apply shall be governed by the laws of Victoria, the state in which the Seller has its principal place of business, and are subject to the jurisdiction of the Dandenong Courts in that state.

19.3 Subject to clause 12 the Seller shall be under no liability whatsoever to the Customer for any indirect and/or consequential loss and/or expense (including loss of profit) suffered by the Customer arising out of a breach by the Seller of these terms and conditions (alternatively the Seller's liability shall be limited to damages which under no circumstances shall exceed the Price of the Goods).

19.4 The Customer shall not be entitled to set off against, or deduct from the Price, any sums owed or claimed to be owed to the Customer by the Seller nor to withhold payment of any invoice because part of that invoice is in dispute.

19.5 The Seller may license or sub-contract all or any part of its rights and obligations without the Customer's consent.

19.6 The Customer agrees that the Seller may amend these terms and conditions at any time. If the Seller makes a change to these terms and conditions, then that change will take effect from the date on which the Seller notifies the Customer of such change. The Customer will be taken to have accepted such changes if the Customer makes a further request for the Seller to provide Goods to the Customer.

19.7 Neither party shall be liable for any default due to any act of God, war, terrorism, strike, lock-out, industrial action, fire, flood, storm or other event beyond the reasonable control of either party.

19.8 The Customer warrants that it has the power to enter into this agreement and has obtained all necessary authorisations to allow it to do so, it is not insolvent and that this agreement creates binding and valid legal obligations on it.

Please note that a larger print version of these terms and conditions is available from the Seller on request.

© Copyright – EC Credit Control 1999 - 2015

CMP
Stonemason Supplies

Melbourne Office
7 Bolt Court
Hallam VIC 3803
(Ph) 03 8786 3113
sales@cmpstone.com.au
sales1@cmpstone.com.au

Queensland Office
24/22 Cessna Drive
Caboolture QLD 4510
(Ph) 07 5498 9491
Andrew: 0432 557 280
qld.sales@cmpstone.com.au

Mobile Vans
Brian: 0402 829 234 (VIC)
Morris: 0421 237 576 (VIC)